```
 Page  8                        (FL4-CD--8-9)              ADAPT-PT  V- 7.10
ACI-99
 ------------------------------------------------------------------------------

 1          .00        .00      123.35      54.32     -118.69     -63.79
 CR       -74.32                  -----                  -----

 Note:
    * = face-of-support


 10.2   SECONDARY MOMENTS  (Tm)
 SPAN    <-- left* -->   <- midspan  ->   <-- right* -->
 -1----------2----------------3----------------4--------
  1            .00             3.97             7.54

 Note:
    * = face-of-support


     10.3 FACTORED REACTIONS      10.4 FACTORED COLUMN MOMENTS  (Tm)
                (T)            <-- LOWER column -->   <-- UPPER column -->
 JOINT       max         min         max         min         max         min
 -1----------2----------3-----------4----------5-----------6----------7-----
  1        84.38       37.38         .00         .00         .00         .00
  2       196.38      132.54       48.09       -4.91       53.97       -5.51


 11 - M I L D   S T E E L
 ==============================================================================

 Support cut-off length for minimum steel(length/span) ...     .17
 Span    cut-off length for minimum steel(length/span) ...     .33
 Top     bar extension beyond where required .............  30.00 cm
 Bottom  bar extension beyond where required .............  30.00 cm


       REINFORCEMENT based on    NO   REDISTRIBUTION  of factored moments
 ------------------------------------------------------------------------------
 11.1     TOTAL WEIGHT OF REBAR =        59.6  Kg     AVERAGE =       .7 Kg/m^2
          TOTAL AREA COVERED    =       86.40   m^2


 11.2.1     S T E E L   A T   M I D - S P A N
                    T O P                                  B O T T O M
          As    DIFFERENT REBAR CRITERIA        As    DIFFERENT REBAR CRITERIA
  SPAN  (cm^2) <---ULT-----TENS-------->      (cm^2) <---ULT-----TENS-------->
 --1------2---------3-------4-------5-----------6---------7-------8-------9----
   1       .0  (     .0      .0      .0)       17.6  (   17.6      .0      .0)


 11.3.1     S T E E L   A T   S U P P O R T S
                    T O P                                  B O T T O M
          As    DIFFERENT REBAR CRITERIA        As    DIFFERENT REBAR CRITERIA
 JOINT  (cm^2) <---ULT-----MIN--------->      (cm^2) <---ULT-----MIN--------->
 --1------2---------3-------4-------5-----------6---------7-------8-------9----
```

KINGDOM OF THAILAND
CHOKCHAI KHATKHAJORN
โชคชัย ขัดขจร
สบ. 4522
REGISTERED PROFESSIONAL ENGINEER

```
 Page  9                          (FL4-CD--8-9)              ADAPT-PT  V- 7.10
ACI-99
 ------------------------------------------------------------------------------

   1        .0  (     .0      .0      .0)          .0  (     .0      .0      .0)
   2        .0  (     .0      .0      .0)          .0  (     .0      .0      .0)

 11.2.2 & 11.3.2     LISTING OF THE ENTIRE PROVIDED REBAR

 -------------------------------------------------------
 SPAN  ID LOCATION  NUM  BAR  LENGTH [cm] AREA [cm^2]
 --1----2-----3------4----5-------6---------7----------
   1    1     B      4 #  6 x    300       11.4
   1    2     B      3 #  6 x    220        8.5
 -------------------------------------------------------
 Notes:
 Bar location - T = Top, B = Bottom.
 NUM - Number of bars.
 For two-way systems a minimum of 4 bars is specified over the supports.
 Refer to tables 11.5.1,11.5.2 and PTsum graphical display for
 positioning of bars.


 11.5.1     ARRANGEMENT OF TOP BARS

 -------|----------- TOP STEEL -----------------|
 SPAN   | ID   LOCATION | NUM  BAR   LENGTH [cm]|
 --1----|--2------3-----|---4----5------6-------|


 11.5.2     ARRANGEMENT OF BOTTOM BARS

 -------|-------- BOTTOM STEEL -----------------|
 SPAN   | ID   LOCATION | NUM  BAR   LENGTH [cm]|
 --1----|--2------3-----|---4----5------6-------|
   1    |  1   CENTER   |   4 #  6 x    300     |
   1    |  2   CENTER   |   3 #  6 x    220     |
 -------|---------------|-----------------------|


 12 -  P U N C H I N G   S H E A R   C H E C K
 ==============================================================================

 LEGEND:
 CONDITION... 1 = INTERIOR COLUMN
              2 = END COLUMN
              3 = CORNER COLUMN
              4 = EDGE COLUMN (PARALLEL TO SPAN)
              5 = EDGE BEAM, WALL, OR OTHER NON-CONFORMING GEOMETRY
                  PERFORM SHEAR CHECK MANUALLY
              6 = STRIP TOO NARROW TO DEVELOP PUNCHING SHEAR

 CASE........ 1 = STRESS WITHIN SECTION #1 GOVERNS (COL.CAP OR SLAB)
              2 = STRESS WITHIN SECTION #2 GOVERNS (DROP PANEL OR SLAB)


            FACTORED ACTIONS    <- PUNCHING SHEAR STRESSES IN Kg/cm^2 ->
             shear   moment     due to   due to            allow-   STRESS
```

KINGDOM OF THAILAND
CHOKCHAI KHATKHAJORN
โชคชัย ขัดขจร
สย. 4522
REGISTERED PROFESSIONAL ENGINEER

```
 Page 10                        (FL4-CD--8-9)              ADAPT-PT  V- 7.10
ACI-99
 ------------------------------------------------------------------------------

 JNT  COND.     T     T-m      shear    moment    TOTAL     able    RATIO  CASE
 -1----2-------3-------4---------5---------6--------7---------8-------9-----10-
  1    6    -------  -------   ------   ------    ------    ------   ----  --
  2    1     196.38   102.07    15.60     8.17     23.77     18.95   1.25   1


 PUNCHING SHEAR STRESS IN ONE OR MORE LOCATIONS EXCEEDS THE PERMISSIBLE
 VALUE. PROVIDE SHEAR REINFORCEMENT, OR ENLARGE THE SECTION RESISTING THE
 PUNCHING SHEAR

 PUNCHING SHEAR CHECK NOT CARRIED OUT FOR SUPPORT WITH CONDITIONS 5 OR 6


  13 - MAXIMUM  S P A N   D E F L E C T I O N S
 ==============================================================================

  Concrete`s modulus of elasticity ............. Ec =   287.00 T/cm^2
  Creep factor ................................. K  =     2.00
  Ieffective/Igross...(due to cracking)......... K  =     1.00

  Where stresses exceed 1.616(fc`)^1/2 cracking of section is allowed for.
  Values in parentheses are (span/max deflection) ratios

         <.......DEFLECTION ARE ALL IN  cm   , DOWNWARD POSITIVE.......>
 SPAN     DL      DL+PT    DL+PT+CREEP         LL        DL+PT+LL+CREEP
 -1--------2--------3-----------4---------------5---------------6------
  1        .5       .2        .5( 1719)       .4( 1930)        .9(  909)
 CANR      .0      -.4      -1.2(  227)       .0( 9629)      -1.3(  222)
```

```
-----------------------------------------------------------------------------
|                          ADAPT CORPORATION                                |
|                   STRUCTURAL CONCRETE SOFTWARE SYSTEM                     |
|       1733 Woodside Road, Suite 220, Redwood City, California 94061       |
-----------------------------------------------------------------------------
|               ADAPT-PT FOR POST-TENSIONED BEAM/SLAB DESIGN                |
|               Version 7.10  AMERICAN (ACI 318-99/UBC-77)                  |
|          ADAPT CORPORATION - Structural Concrete Software System          |
|       1733 Woodside Road, Suite 220, Redwood City, California 94061       |
|                Phone: (650)306-2400,  Fax: (650)364-4678                  |
|     Email: Support@AdaptSoft.com, Web site: http://www.AdaptSoft.com      |
-----------------------------------------------------------------------------
DATE AND TIME OF PROGRAM EXECUTION:                Nov 11,2020   At Time: 14:2
PROJECT FILE:                                                          FL4-CH


P R O J E C T   T I T L E:
Government Complex
FL4-CH

1 - USER SPECIFIED   G E N E R A L   D E S I G N   P A R A M E T E R S
==============================================================================

CONCRETE:
STRENGTH at 28 days, for BEAMS/SLABS .............     350.00 Kg/cm^2
                     for COLUMNS ................     350.00 Kg/cm^2

MODULUS OF ELASTICITY for BEAMS/SLABS ............     287.00 T/cm^2
                      for COLUMNS ................     287.00 T/cm^2

CREEP factor for deflections for BEAMS/SLABS .....       2.00
CONCRETE WEIGHT ..................................      NORMAL

SELF WEIGHT ......................................    2400.00 Kg/m^3


TENSION STRESS limits (multiple of (f'c)1/2)
At Top  ..........................................       1.590
At Bottom  .......................................       1.590

COMPRESSION STRESS limits (multiple of (f'c))
At all locations .................................        .450

REINFORCEMENT:
YIELD Strength ...................................       4.00 T/cm^2
Minimum Cover at TOP .............................       1.50 cm
Minimum Cover at BOTTOM ..........................       1.50 cm

POST-TENSIONING:
SYSTEM ...........................................       BONDED
Ultimate strength of strand ......................      19.00 T/cm^2
Average effective stress in strand (final) .......      10.80 T/cm^2
Strand area.......................................        .990 cm^2
Min CGS of tendon from TOP........................       4.20 cm
Min CGS of tendon from BOTTOM for INTERIOR spans..       5.60 cm
Min CGS of tendon from BOTTOM for EXTERIOR spans..       5.60 cm
Min average precompression .......................      10.00 Kg/cm^2
```

KINGDOM OF THAILAND
CHOKCHAI KHATKHAJORN
โชคชัย ขัดขจร
สย. 4522
REGISTERED PROFESSIONAL ENGINEER

Page 2 (FL4-CH) ADAPT-PT V- 7.10
ACI-99

Max spacing between strands (factor of slab depth) 8.00
Tendon profile type and support widths..... (see section 9)

ANALYSIS OPTIONS USED:
Structural system ....(using EQUIVALENT FRAME).... TWO-WAY
Moments REDUCED to face of support ..... YES

KINGDOM OF THAILAND
CHOKCHAI KHATKHAJORN
โชคชัย ขัดขจร
สย. 4522
REGISTERED PROFESSIONAL ENGINEER

2 - I N P U T G E O M E T R Y

2.1.1 PRINCIPAL SPAN DATA OF UNIFORM SPANS

SPAN	TYPE	FORM	LENGTH m	WIDTH cm	DEPTH cm	TOP FLANGE width cm	TOP FLANGE thick. cm	BOTTOM/MIDDLE FLANGE width cm	BOTTOM/MIDDLE FLANGE thick. cm	REF HEIGHT cm	MULTIPLIER left	MULTIPLIER right
-1-	-2-	-3-	----4-	-------5-	-------6-	-------7-	------8-	------9-	------10-	----11-	-----12-	----13-
C	U	2	2.80	400.00	45.00	950.00	30.00			.00	.50	.50
1	U	2	8.40	400.00	45.00	950.00	30.00			.00	.50	.50
2	U	2	8.40	400.00	45.00	950.00	30.00			.00	.50	.50
3	U	2	8.40	400.00	45.00	950.00	30.00			.00	.50	.50
4	U	2	8.40	400.00	45.00	950.00	30.00			.00	.50	.50
5	U	2	8.40	400.00	45.00	950.00	30.00			.00	.50	.50
C	U	2	2.80	400.00	45.00	950.00	30.00			.00	.50	.50

LEGEND:
1 - SPAN
C = Cantilever
2 - TYPE
U = Uniform; prismatic
N = Nonuniform section

3 - FORM
1 = Rectangular section
2 = T or Inverted L section
3 = I section
4 = Extended T or L section
7 = Joist
8 = Waffle
11 - Top surface to reference line

2.2 - S U P P O R T W I D T H A N D C O L U M N D A T A

JOINT	SUPPORT WIDTH cm	LOWER COLUMN LENGTH m	LOWER COLUMN B(DIA) cm	LOWER COLUMN D cm	LOWER COLUMN CBC*	UPPER COLUMN LENGTH m	UPPER COLUMN B(DIA) cm	UPPER COLUMN D cm	UPPER COLUMN CBC*
--1-	-------2-	---------3-	-------4-	-------5-	-----6-	---------7-	-------8-	-------9-	----10---
1	80.00	4.30	100.00	80.00	(1)	3.60	100.00	80.00	(1)
2	80.00	4.30	100.00	80.00	(1)	3.60	100.00	80.00	(1)
3	80.00	4.30	100.00	80.00	(1)	3.60	100.00	80.00	(1)
4	80.00	4.30	100.00	80.00	(1)	3.60	100.00	80.00	(1)
5	80.00	4.30	100.00	80.00	(1)	3.60	100.00	80.00	(1)

```
 Page  3                          (FL4-CH)                    ADAPT-PT  V- 7.10
ACI-99
 ------------------------------------------------------------------------------

    6     80.00       4.30  100.00   80.00  (1)        3.60  100.00   80.00  (1)

 *THE COLUMN BOUNDARY CONDITION CODES (CBC)
 Fixed at both ends ...(STANDARD) ............................ = 1
 Hinged at near end, fixed at far end ........................ = 2
 Fixed at near end, hinged at far end ........................ = 3
 Fixed at near end, roller with rotational fixity at far end .. = 4
```

KINGDOM OF THAILAND
CHOKCHAI KHATKHAJORN
โชคชัย ขัดขจร
สย. 4522
REGISTERED PROFESSIONAL ENGINEER

```
3 - I N P U T   A P P L I E D   L O A D I N G
==============================================================================

<---CLASS--->                <--------------TYPE------------------->
D = DEAD LOAD                U = UNIFORM          P = PARTIAL UNIFORM
L = LIVE LOAD                C = CONCENTRATED     M = APPLIED MOMENT
                             Li= LINE LOAD
SW= SELF WEIGHT Computed from geometry input and treated as dead loading
    Unit selfweight  W = 2400.0 Kg/m^3

                   Intensity  ( From ...  To ) ( M   or C ...At) Total on Trib
SPAN  CLASS  TYPE    T/m^2    (  m        m  ) ( T-m or T ...m )       T/m
-1-----2------3--------4----------5--------6---------7-------8---------9------
CANT   L      U       1.000      .00      2.80                          9.500
CANT   D      U        .370      .00      2.80                          3.515
CANT   SW     U                  .00      2.80                          8.280

 1     L      U       1.000      .00      8.40                          9.500
 1     D      U        .370      .00      8.40                          3.515
 1     SW     U                  .00      8.40                          8.280

 2     L      U       1.000      .00      8.40                          9.500
 2     D      U        .370      .00      8.40                          3.515
 2     SW     U                  .00      8.40                          8.280

 3     L      U       1.000      .00      8.40                          9.500
 3     D      U        .370      .00      8.40                          3.515
 3     SW     U                  .00      8.40                          8.280

 4     L      U       1.000      .00      8.40                          9.500
 4     D      U        .370      .00      8.40                          3.515
 4     SW     U                  .00      8.40                          8.280

 5     L      U       1.000      .00      8.40                          9.500
 5     D      U        .370      .00      8.40                          3.515
 5     SW     U                  .00      8.40                          8.280

CANT   L      U       1.000      .00      2.80                          9.500
CANT   D      U        .370      .00      2.80                          3.515
CANT   SW     U                  .00      2.80                          8.280
```

```
 Page  4                          (FL4-CH)                    ADAPT-PT  V- 7.10
ACI-99
 ------------------------------------------------------------------------------

  NOTE: LIVE LOADING is SKIPPED with a skip factor of      .75


 3.1 - LOADING AS APPEARS IN USER`S INPUT SCREEN PRIOR TO PROCESSING
 ==============================================================================

                      UNIFORM
                      ( T/m^2),     ( CON. or PART. )     ( M O M E N T )
 SPAN  CLASS  TYPE    LINE( T/m)    (  T@m or  m-m  )     (  T-m  @  m  )
 -1-----2------3---------4------------5-------6-----------7-------8------------
 CANT   L      U         1.000
 CANT   D      U          .370
  1     L      U         1.000
  1     D      U          .370
  2     L      U         1.000
  2     D      U          .370
  3     L      U         1.000
  3     D      U          .370
  4     L      U         1.000
  4     D      U          .370
  5     L      U         1.000
  5     D      U          .370
 CANT   L      U         1.000
 CANT   D      U          .370
  NOTE: SELFWEIGHT INCLUSION REQUIRED
        LIVE LOADING is SKIPPED with a skip factor of      .75


 4 - C A L C U L A T E D   S E C T I O N   P R O P E R T I E S
 ==============================================================================

 4.1   For Uniform Spans and Cantilevers only

 SPAN          AREA              I               Yb              Yt
               cm^2             cm^4             cm              cm
 -1-------------2----------------3---------------4-------------5-----
  CANT.       34500.00        .4759E+07        26.09           18.91
   1          34500.00        .4759E+07        26.09           18.91
   2          34500.00        .4759E+07        26.09           18.91
   3          34500.00        .4759E+07        26.09           18.91
   4          34500.00        .4759E+07        26.09           18.91
   5          34500.00        .4759E+07        26.09           18.91
  CANT.       34500.00        .4759E+07        26.09           18.91

 Note:
   --- = Span/Cantilever is Nonuniform, see block 4.2
```

KINGDOM OF THAILAND
CHOKCHAI KHATKHAJORN
โชคชัย ขัดขจร
สย. 4522
REGISTERED PROFESSIONAL ENGINEER

Page 5 (FL4-CH) ADAPT-PT V- 7.10
ACI-99

5 - DEAD LOAD MOMENTS, SHEARS & REACTIONS

SPAN	< 5.1 SPAN MOMENTS (Tm) > M(l)*	Midspan	M(r)*	< 5.2 SPAN SHEARS (T) > SH(l)	SH(r)
CANT	-----	-----	-46.24	-----	33.03
1	-58.32	38.24	-73.26	-47.76	51.32
2	-71.17	34.10	-68.69	-49.83	49.24
3	-69.10	34.93	-69.11	-49.54	49.54
4	-68.69	34.10	-71.18	-49.24	49.83
5	-73.25	38.24	-58.32	-51.32	47.76
CANT	-46.24	-----	-----	-33.03	-----

Note:
* = Centerline moments

JOINT	< 5.3 REACTIONS (T) >	<- 5.4 COLUMN MOMENTS (Tm) -> Lower columns	Upper columns
1	80.79	-5.89	-6.19
2	101.15	1.01	1.07
3	98.78	-.20	-.21
4	98.78	.20	.21
5	101.15	-1.01	-1.07
6	80.79	5.89	6.20

KINGDOM OF THAILAND
CHOKCHAI KHATKHAJORN
โชคชัย ขัดขจร
สย. 4522
REGISTERED PROFESSIONAL ENGINEER

6 - LIVE LOAD MOMENTS, SHEARS & REACTIONS

<-- 6.1 LIVE LOAD SPAN MOMENTS (Tm) and SHEAR FORCES (T) -->

SPAN	<----- left* -----> max	min	<--- midspan ---> max	min	<---- right* -----> max	min	<--SHEAR FORCE--> left	right
CL	-----		-----		-37.24		-----	26.60
1	-46.97	-8.78	33.01	-9.91	-59.00	-7.87	-38.47	41.33
2	-57.33	-10.18	31.32	-10.72	-55.33	-7.70	-40.14	39.66
3	-55.66	-8.28	31.51	-10.41	-55.66	-8.28	-39.90	39.90
4	-55.32	-7.70	31.32	-10.72	-57.33	-10.18	-39.66	40.14
5	-59.00	-7.87	33.01	-9.91	-46.97	-8.78	-41.33	38.47
CR	-37.24		-----		-----		-26.60	-----

Note:
* = Centerline moments

JOINT	<- 6.2 REACTIONS (T) -> max	min	<-------- 6.3 COLUMN MOMENTS (Tm) --------> <--- LOWER COLUMN ---> max	min	<--- UPPER COLUMN ---> max	min
1	68.19	26.24	12.45	-17.19	13.09	-18.08

```
 Page  6                          (FL4-CH)                    ADAPT-PT  V- 7.10
ACI-99
 ------------------------------------------------------------------------------

   2         88.76       35.57        14.25      -13.43        14.99      -14.13
   3         87.90       35.45        13.60      -13.76        14.30      -14.47
   4         87.90       35.45        13.76      -13.60        14.47      -14.30
   5         88.76       35.57        13.43      -14.25        14.13      -14.99
   6         68.19       26.24        17.19      -12.45        18.08      -13.09

 Note:  Block 6.1 through 6.3 values are maxima of all skipped loading cases


 7 -    M O M E N T S   REDUCED TO FACE-OF-SUPPORT
 ==============================================================================

          7.1  R E D U C E D   DEAD LOAD MOMENTS  (Tm)

  SPAN        <- left* ->  <- midspan ->   <- right* ->
 --1---------------2-------------3-------------4-------------------------------
  CANT           -----        -----        -33.97
   1            -40.16        38.24        -53.67
   2            -52.18        34.10        -49.94
   3            -50.23        34.93        -50.23
   4            -49.94        34.10        -52.19
   5            -53.67        38.24        -40.16
  CANT          -33.97        -----         -----

 Note:
    * = face-of-support


          7.2  R E D U C E D   LIVE LOAD MOMENTS  (Tm)

       <----- left* ------>   <---- midspan  ---->   <----- right* ----->
 SPAN       max         min          max         min          max         min
 -1----------2----------3-----------4----------5-----------6----------7-----
 CL        -----                    -----                   -27.36
  1       -32.35       -8.88        33.01       -9.91       -43.23       -7.96
  2       -42.03      -10.06        31.32      -10.72       -40.22       -7.81
  3       -40.46       -8.28        31.51      -10.41       -40.46       -8.28
  4       -40.22       -7.82        31.32      -10.72       -42.03      -10.06
  5       -43.23       -7.96        33.01       -9.91       -32.35       -8.88
 CR       -27.36                    -----                    -----

 Note:
    * = face-of-support


 8 -   SUM OF DEAD AND LIVE MOMENTS  (Tm)
 ==============================================================================
 Maxima of dead load and live load span moments combined
 for serviceability checks    (  1.00DL +  1.00LL )

       <----- left* ------>   <---- midspan  ---->   <----- right* ----->
```

KINGDOM OF THAILAND
CHOKCHAI KHATKHAJORN
โชคชัย ขัดขจร
สย. 4522
REGISTERED PROFESSIONAL ENGINEER

Page 7 (FL4-CH) ADAPT-PT V- 7.10
ACI-99

SPAN	max	min	max	min	max	min
CL	-----		-----		-61.33	
1	-72.51	-49.04	71.25	28.33	-96.90	-61.63
2	-94.21	-62.24	65.42	23.38	-90.16	-57.75
3	-90.69	-58.51	66.44	24.52	-90.69	-58.51
4	-90.16	-57.76	65.42	23.38	-94.22	-62.25
5	-96.90	-61.63	71.25	28.33	-72.51	-49.04
CR	-61.33		-----		-----	

Note:
* = face-of-support

9 - SELECTED POST-TENSIONING FORCES AND TENDON PROFILES

9.1 PROFILE TYPES AND PARAMETERS

LEGEND:

For Span:
1 = reversed parabola
2 = simple parabola with straight portion over support
3 = harped tendon

For Cantilever:
1 = simple parabola
2 = partial parabola
3 = harped tendon

KINGDOM OF THAILAND
CHOKCHAI KHATKHAJORN
โชคชัย ขัดขจร
สย. 4522
REGISTERED PROFESSIONAL ENGINEER

9.2 TENDON PROFILE

	TYPE	X1/L	X2/L	X3/L	A/L
CANT	1			.000	
1	1	.100	.500	.100	.000
2	1	.100	.500	.100	.000
3	1	.100	.500	.100	.000
4	1	.100	.500	.100	.000
5	1	.100	.500	.100	.000
CANT	1	.000			

9.3 - SELECTED POST-TENSIONING FORCES AND TENDON DRAPE

Tendon editing mode selected: TENDON SELECTION

SPAN	SELECTED VALUES FORCE (T/-)	DISTANCE OF CGS (cm) Left	Center	Right	CALCULATED VALUES P/A (Kg/cm^2)	Wbal (T/-)	Wbal (%DL)

Page 8 (FL4-CH) ADAPT-PT V- 7.10
ACI-99

CANT	386.400	-19.10		-9.20	11.29	9.841	83
1	410.796	-9.20	-39.40	-9.20	11.91	14.066	119
2	387.834	-9.20	-39.40	-9.20	11.24	13.280	113
3	350.168	-9.20	-39.40	-9.20	10.15	11.990	102
4	387.834	-9.20	-39.40	-9.20	11.24	13.280	113
5	410.796	-9.20	-39.40	-9.20	11.91	14.066	119
CANT	386.400	-9.20		-19.10	11.29	9.841	83

Approximate weight of strand ..... 1322.1 Kg

9.35 - TENDON SELECTION DATA:

```
TYPE  SEL. FORCE  <------------------ TENDON EXTENTS ------------------------>
           (T )    <C>   <1>   <2>   <3>   <4>   <5>   <C>
--1----2-----3---|-----|-----|-----|-----|-----|-----|-----|-----|-----|-----|
  A   35   11.23  <==============================================>
```

9.5 R E Q U I R E D MINIMUM P O S T - T E N S I O N I N G FORCES (T)

SPAN	<- BASED ON STRESS CONDITIONS -> LEFT*	CENTER	RIGHT*	<- BASED ON MINIMUM P/A -> LEFT	CENTER	RIGHT
CANT	-----	-----	.00	-----	-----	345.00
1	.00	90.04	87.57	345.00	345.00	345.00
2	78.64	64.69	63.60	345.00	345.00	345.00
3	65.88	69.50	65.88	345.00	345.00	345.00
4	63.60	64.69	78.68	345.00	345.00	345.00
5	87.57	90.04	.00	345.00	345.00	345.00
CANT	.00	-----	-----	345.00	-----	-----

Note:
* = face-of-support

9.6 S E R V I C E S T R E S S E S (Kg/cm^2) (tension shown positive)

	L E F T * TOP max-T	TOP max-C	BOTTOM max-T	BOTTOM max-C	R I G H T * TOP max-T	TOP max-C	BOTTOM max-T	BOTTOM max-C
CL	-----	-----	-----	-----	2.19	-8.68	-----	-29.85
1	-----	-12.32	-----	-22.65	-----	-16.70	-----	-24.69
2	-----	-15.04	-----	-24.82	.12	-12.76	-----	-25.91
3	.88	-11.91	-----	-26.60	.88	-11.91	-----	-26.60
4	.12	-12.76	-----	-25.92	-----	-15.03	-----	-24.83
5	-----	-16.70	-----	-24.69	-----	-12.33	-----	-22.65
CR	2.19	-8.68	-----	-29.85	-----	-----	-----	-----

Note:
* = face-of-support

KINGDOM OF THAILAND
CHOKCHAI KHATKHAJORN
โชคชัย ขัดขจร
สย. 4522
REGISTERED PROFESSIONAL ENGINEER

Page 9 (FL4-CH) ADAPT-PT V- 7.10
ACI-99

C E N T E R

	TOP max-T	TOP max-C	BOTTOM max-T	BOTTOM max-C
CL	-----	-----	-----	-----
1	-----	-18.06	-----	-26.94
2	-----	-18.82	-----	-23.83
3	-----	-19.55	2.82	-20.16
4	-----	-18.82	-----	-23.83
5	-----	-18.06	-----	-26.94
CR	-----	-----	-----	-----

9.7 POST-TENSIONING B A L A N C E D M O M E N T S, SHEARS & REACTIONS

SPAN	<-- S P A N M O M E N T S (Tm) --> left*	midspan	right*	<-- SPAN SHEARS (T) --> SH(l)	SH(r)
CANT	-----	-----	27.44	-----	21.49
1	51.73	-55.76	73.62	-2.88	-2.88
2	70.43	-46.34	62.62	.75	.75
3	61.63	-42.77	61.63	.00	.00
4	62.62	-46.34	70.43	-.75	-.75
5	73.62	-55.76	51.73	2.88	2.88
CANT	27.44	-----	-----	21.49	-----

Note:
* = face-of-support

joint	<--REACTIONS (T)-->	<-- COLUMN MOMENTS (Tm) --> Lower columns	Upper columns
1	2.881	9.962	10.480
2	-3.631	-2.063	-2.170
3	.750	-.488	-.513
4	.750	.487	.512
5	-3.630	2.062	2.169
6	2.880	-9.963	-10.480

KINGDOM OF THAILAND
CHOKCHAI KHATKHAJORN
โชคชัย ขัดขจร
สย. 4522
REGISTERED PROFESSIONAL ENGINEER

10 - F A C T O R E D M O M E N T S & R E A C T I O N S

Calculated as (1.40D + 1.70L + 1.00 secondary moment effects)

10.1 FACTORED DESIGN MOMENTS (Tm)

SPAN	<----- left* ------> max	min	<---- midspan ----> max	min	<----- right* -----> max	min

Page 10 (FL4-CH) ADAPT-PT V- 7.10
ACI-99

CL	-----		-----		-94.07	
1	-89.63	-49.74	142.20	69.24	-105.14	-45.18
2	-104.39	-50.04	138.24	66.77	-103.88	-48.79
3	-105.99	-51.29	135.57	64.31	-105.99	-51.29
4	-103.89	-48.80	138.24	66.77	-104.42	-50.07
5	-105.15	-45.19	142.20	69.24	-89.62	-49.73
CR	-94.07		-----		-----	

Note:
* = face-of-support

10.2 SECONDARY MOMENTS (Tm)

SPAN	<-- left* -->	<- midspan ->	<-- right* -->
1	21.59	32.54	43.49
2	40.11	37.26	34.41
3	33.11	33.11	33.11
4	34.40	37.25	40.10
5	43.48	32.54	21.60

Note:
* = face-of-support

KINGDOM OF THAILAND
CHOKCHAI KHATKHAJORN
โชคชัย ขัดขจร
สย. 4522
REGISTERED PROFESSIONAL ENGINEER

	10.3 FACTORED REACTIONS (T)		10.4 FACTORED COLUMN MOMENTS (Tm) <-- LOWER column -->		<-- UPPER column -->	
JOINT	max	min	max	min	max	min
1	231.91	160.60	22.88	-27.51	24.06	-28.93
2	288.94	198.52	23.58	-23.47	24.81	-24.70
3	288.47	199.31	22.35	-24.16	23.50	-25.41
4	288.47	199.31	24.16	-22.35	25.41	-23.50
5	288.94	198.52	23.47	-23.58	24.70	-24.81
6	231.91	160.59	27.51	-22.88	28.93	-24.06

11 - M I L D S T E E L

Support cut-off length for minimum steel(length/span) ... .17
Span cut-off length for minimum steel(length/span) ... .33
Top bar extension beyond where required ..... 30.00 cm
Bottom bar extension beyond where required ..... 30.00 cm

REINFORCEMENT based on NO REDISTRIBUTION of factored moments

11.1 TOTAL WEIGHT OF REBAR = .0 Kg AVERAGE = .0 Kg/m^2
TOTAL AREA COVERED = 452.20 m^2

```
 Page 11                          (FL4-CH)                    ADAPT-PT  V- 7.10
ACI-99
 ------------------------------------------------------------------------------

 11.2.1     S T E E L    A T    M I D - S P A N
                      T O P                                   B O T T O M
          As    DIFFERENT REBAR CRITERIA          As    DIFFERENT REBAR CRITERIA
  SPAN  (cm^2) <---ULT-----TENS-------->        (cm^2) <---ULT-----TENS-------->
 --1------2---------3-------4-------5-----------6---------7-------8-------9----
   1       .0  (     .0      .0      .0)          .0  (     .0      .0      .0)
   2       .0  (     .0      .0      .0)          .0  (     .0      .0      .0)
   3       .0  (     .0      .0      .0)          .0  (     .0      .0      .0)
   4       .0  (     .0      .0      .0)          .0  (     .0      .0      .0)
   5       .0  (     .0      .0      .0)          .0  (     .0      .0      .0)


 11.3.1     S T E E L    A T    S U P P O R T S
                      T O P                                   B O T T O M
          As    DIFFERENT REBAR CRITERIA          As    DIFFERENT REBAR CRITERIA
 JOINT  (cm^2) <---ULT-----MIN--------->        (cm^2) <---ULT-----MIN--------->
 --1------2---------3-------4-------5-----------6---------7-------8-------9----
   1       .0  (     .0      .0      .0)          .0  (     .0      .0      .0)
   2       .0  (     .0      .0      .0)          .0  (     .0      .0      .0)
   3       .0  (     .0      .0      .0)          .0  (     .0      .0      .0)
   4       .0  (     .0      .0      .0)          .0  (     .0      .0      .0)
   5       .0  (     .0      .0      .0)          .0  (     .0      .0      .0)
   6       .0  (     .0      .0      .0)          .0  (     .0      .0      .0)

 11.2.2 & 11.3.2     LISTING OF THE ENTIRE PROVIDED REBAR

 -------------------------------------------------------
 SPAN  ID LOCATION  NUM  BAR  LENGTH [cm] AREA [cm^2]
 --1----2-----3------4----5-------6---------7----------
 Notes:
 Bar location - T = Top, B = Bottom.
 NUM - Number of bars.
 For two-way systems a minimum of 4 bars is specified over the supports.
 Refer to tables 11.5.1,11.5.2 and PTsum graphical display for
 positioning of bars.


 11.5.1     ARRANGEMENT OF TOP BARS

 -------|----------- TOP STEEL -----------------|
 SPAN   | ID   LOCATION | NUM  BAR   LENGTH [cm]|
 --1----|--2------3-----|---4----5------6-------|


 11.5.2     ARRANGEMENT OF BOTTOM BARS

 -------|-------- BOTTOM STEEL -----------------|
 SPAN   | ID   LOCATION | NUM  BAR   LENGTH [cm]|
 --1----|--2------3-----|---4----5------6-------|


 12 -  P U N C H I N G   S H E A R   C H E C K
 ==============================================================================
```

KINGDOM OF THAILAND
CHOKCHAI KHATKHAJORN
โชคชัย ขัดขจร
สย. 4522
REGISTERED PROFESSIONAL ENGINEER

Page 12 (FL4-CH) ADAPT-PT V- 7.10
ACI-99

LEGEND:
CONDITION... 1 = INTERIOR COLUMN
2 = END COLUMN
3 = CORNER COLUMN
4 = EDGE COLUMN (PARALLEL TO SPAN)
5 = EDGE BEAM, WALL, OR OTHER NON-CONFORMING GEOMETRY
PERFORM SHEAR CHECK MANUALLY
6 = STRIP TOO NARROW TO DEVELOP PUNCHING SHEAR

CASE..... 1 = STRESS WITHIN SECTION #1 GOVERNS (COL.CAP OR SLAB)
2 = STRESS WITHIN SECTION #2 GOVERNS (DROP PANEL OR SLAB)

		FACTORED ACTIONS		<- PUNCHING SHEAR STRESSES IN Kg/cm^2 ->					
JNT	COND.	shear T	moment T-m	due to shear	due to moment	TOTAL	allow-able	STRESS RATIO	CASE
1	2	3	4	5	6	7	8	9	10
1	1	231.91	56.43	10.49	2.25	12.74	18.00	.71	1
2	1	288.94	48.39	13.07	1.93	15.00	18.00	.83	1
3	1	288.47	49.57	13.04	1.98	15.02	17.83	.84	1
4	1	288.47	49.57	13.04	1.98	15.02	17.83	.84	1
5	1	288.94	48.39	13.07	1.93	15.00	18.00	.83	1
6	1	231.91	56.44	10.49	2.25	12.74	18.00	.71	1

PUNCHING SHEAR CHECK SATISFACTORY
NO ADDITIONAL REBAR OR CHANGE IN SECTION IS NECESSARY

13 - MAXIMUM S P A N D E F L E C T I O N S

Concrete`s modulus of elasticity ..... Ec = 287.00 T/cm^2
Creep factor ..... K = 2.00
Ieffective/Igross...(due to cracking)..... K = 1.00

Where stresses exceed 1.616(fc`)^1/2 cracking of section is allowed for.
Values in parentheses are (span/max deflection) ratios

	<.....DEFLECTION ARE ALL IN cm			, DOWNWARD POSITIVE.....>	
SPAN	DL	DL+PT	DL+PT+CREEP	LL	DL+PT+LL+CREEP
1	2	3	4	5	6
CANL	.0	.0	.0(*****)	.0(22053)	.0(24998)
1	.1	.0	-.1(6473)	.1(7790)	.0(38294)
2	.1	.0	.0(18987)	.1(9737)	.0(19987)
3	.1	.0	.0(*****)	.1(9275)	.1(9880)
4	.1	.0	.0(18982)	.1(9736)	.0(19991)
5	.1	.0	-.1(6473)	.1(7790)	.0(38309)
CANR	.0	.0	.0(*****)	.0(22045)	.0(24994)

KINGDOM OF THAILAND
CHOKCHAI KHATKHAJORN
โชคชัย ขัตขจร
สย. 4522
REGISTERED PROFESSIONAL ENGINEER

4. รายการคำนวณพื้นค.ส.ล.

KINGDOM OF THAILAND
CHOKCHAI KHATKHAJORN
โชคชัย ขัดขจร
สย. 4522
REGISTERED PROFESSIONAL ENGINEER

DYNAMIC ENGINEERING CONSULTANT CO., LTD.

ONE WAY SLAB

(Ultimate Stress Design method in accordance with ACI 318-89)

Job No.	:	193018
Rev.	:	0
Initial	:	CKJ
Date	:	6-Aug-20

Slab No. S-1

Project : อาคารด้านทิศตะวันออก

filename : 1 Slab

Concrete Strength	fc'	=	350	[kg/cm²]
	fy SD	=	4000	[kg/cm²]
	fy RD	=	2400	[kg/cm²]
Clear span Length	Ln	=	340	[cm]
Load	LL	=	800	[kg/ m]
Type of Slab	Simple Support			
Reinforcement Steel	DB12			

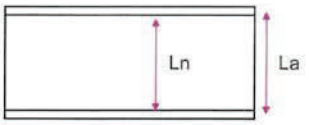

	DL		360	[kg/ m]
Thick of Slab	h	=	15	[cm]
	Wu	=	1864	[kg/ m]
Moment	- Mu L	=	898	[kg-m]
	+ Mu m	=	2693	[kg-m]
	- Mu R	=	898	[kg-m]
Shear	Vur	=	3644	[kg]
	K	=	0.80	
	ϕ	=	0.90	
	ρ	=	0.0360	
	ρ_{max}	=	0.0270	
	d	=	5.8	[cm] ($M_u / \phi \rho f_y d_b^2 (1-0.59 r f_y / f_c')$)$^{0.5}$
	d	<	h	OK

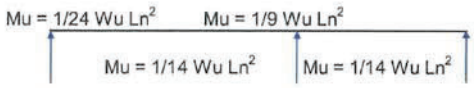

Vur =1.15Wu Ln /2

Sheck Shear

Existing Unit Shear	vc	=	3.17	[kg/cm²]
Allowable Shear unit	v all	=	8.92	[kg/cm²]
	vc	<	v all	OK
	a try	=	0.9108	[cm]
	As	=	6.774	[cm²]
	a	=	0.9108	[cm]
	j d	=	14.54	[cm]

Check Deflection

Δ all	=	0.94	[cm]	
ρ fy	=	13.7	< 35	[kg/cm²]
I	=	28125	[cm⁴]	
Ec	=	284116	[kg/cm²]	
Δ	=	0.41	[cm] <	Δ all OK
LL = 40 % and Cofficient	=	2		
Δ Time	=	0.3	<	Δ all OK

Moment arm

$M_u / \phi f_y j$

- Mu L	As L	=	1.71	[cm²]	2 DB12	@	0.300	OK
+ Mu m	As m	=	5.14	[cm²]	5 DB12	@	0.200	OK
- Mu R	As R	=	1.71	[cm²]	2 DB12	@	0.300	OK
Minmum Steel		As min	=	3.00	[cm²]	3 DB12	@	0.300	OK

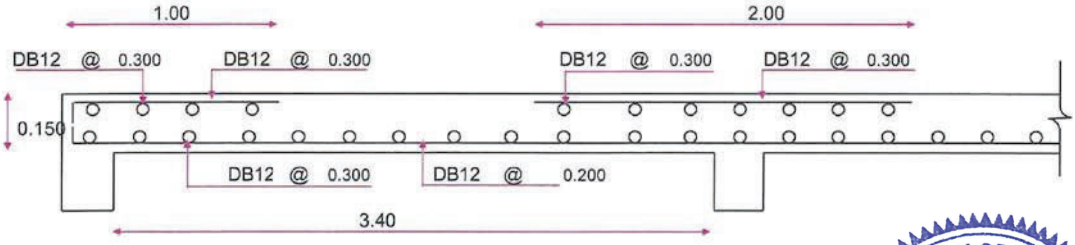

One Way Slab (0.15)

KINGDOM OF THAILAND
CHOKCHAI KHATKHAJORN
โชคชัย ขัดขจร
สย. 4522
REGISTERED PROFESSIONAL ENGINEER

DYNAMIC ENGINEERING CONSULTANT CO., LTD.

Job No.	:	193018
Rev.	:	0
Initial	:	CKJ
Date	:	6-Aug-20

TWO WAY SLAB

(Ultimate Stress Design method in accordance with ACI 318-89)

(Method 2)

Slab No. MS-1

Project : อาคารด้านทิศตะวันออก โซน ซี

Filename : Slab S

Concrete Strength	fc'	=	350	[kg/cm²]
	fy SD	=	4000	[kg/cm²]
	fy RD	=	2400	[kg/cm²]
Thick of Slab	h	=	20	[cm]
Clear span Length	La	=	400	[cm]
	Lb	=	500	[cm]
Live Load	LL	=	2000	[kg/m²]
Finishing Load	FL	=	120	[kg/m²]

0 Siden Continuous | DB12

	DL	=	480	[kg/ m]
	k	=	0.80	
	ϕ bend	=	0.90	
	ϕ Shear	=	0.85	
Cover (Short Side)	Cc	=	3.0	[cm]
Depth of Slab	d	=	17.0	[cm]
	Wu	=	4240	[kg/ m]
	Lb/La	=	1.25	OK
La/Lb	m	=	0.800	
Shear	Vu S	=	5653	[kg/m]
	Vu L	=	6671	[kg/m]
	Vc all	=	11378	[kg/m]

Vu L < Vc all OK

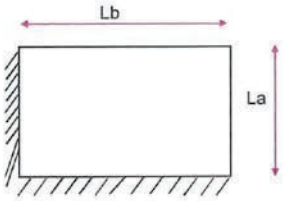

Check h	ρ	=	0.0360	
	ρ_{max}	=	0.0270	
Required d		=	6.5	[cm]

$(Mu / \phi \rho fy db^2 (1-0.59 \rho fy / fc'))^{0.5}$

d < 17.0 OK

	a try	=	1	[cm]
	As	=	5.670	[cm²]
	a	=	0.7623	[cm]
Moment arm	j d	=	16.62	[cm]

Short Span

Mu / ϕ fy j d

Moment	- Continue	Mu	=	0	[kg-m]	As1	=	0.00	[cm²]	1 DB12	@	0.250	OK
	- Not Cont.	Mu	=	0	[kg-m]	As2	=	0.00	[cm²]	1 DB12	@	0.250	OK
	+ Middle	Mu m	=	0	[kg-m]	As3	=	0.00	[cm²]	1 DB12	@	0.250	OK

Long Span

Moment	- Continue	Mu	=	0	[kg-m]	As4	=	0.00	[cm²]	1 DB12	@	0.250	OK
	- Not Cont.	Mu	=	2239	[kg-m]	As5	=	3.74	[cm²]	4 DB12	@	0.250	OK
	+ Middle	Mu m	=	3392	[kg-m]	As6	=	5.67	[cm²]	6 DB12	@	0.150	OK
	Minimum Steel					As min	=	4.00	[cm²]	4 DB12	@	0.250	OK

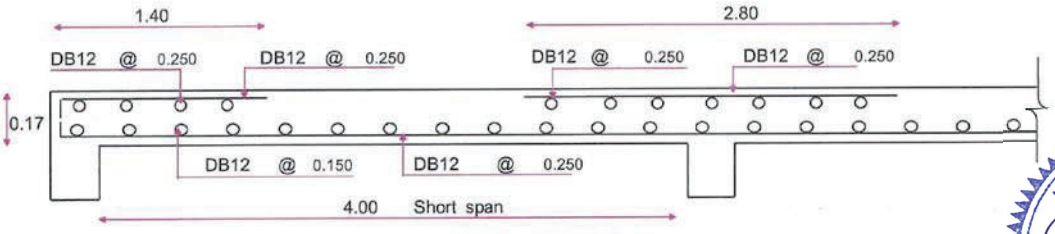

Two Way Slab (0.20)

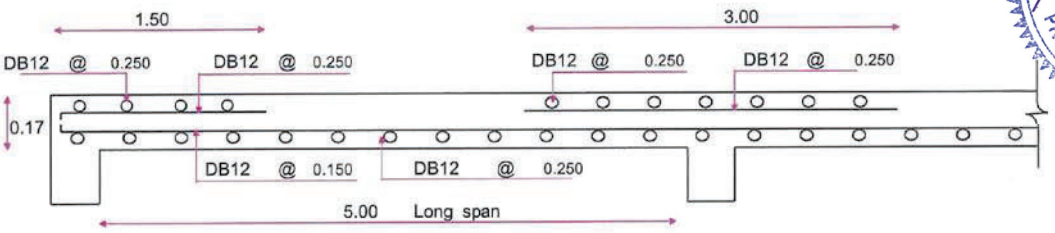

Two Way Slab (0.20)

KINGDOM OF THAILAND
CHOKCHAI KHATKHAJORN
โชคชัย ขัดขจร
สย. 4522
REGISTERED PROFESSIONAL ENGINEER

DYNAMIC ENGINEERING CONSULTANT CO., LTD.

ONE WAY SLAB

(Ultimate Stress Design method in accordance with ACI 318-89)

Job No.	:	193018
Rev.	:	0
Initial	:	CKJ
Date	:	6-Aug-20

Slab No. RPS-1

Project : อาคารทิศตะวันออก

filename : Slab

Concrete Strength	fc'	=	350	[kg/cm²]
	fy SD	=	4000	[kg/cm²]
	fy RD	=	2400	[kg/cm²]
Clear span Length	Ln	=	200	[cm]
Load	LL	=	2000	[kg/ m]
Type of Slab	Simple Support			
Reinforcement Steel	DB12			

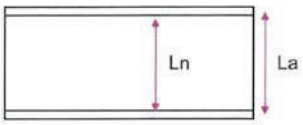

	DL		300	[kg/ m]
Thick of Slab	h	=	12.5	[cm]
	Wu	=	3820	[kg/ m]
Moment	- Mu L	=	637	[kg-m]
	+ Mu m	=	1910	[kg-m]
	- Mu R	=	637	[kg-m]
Shear	Vur	=	4393	[kg]
	K	=	0.80	
	ϕ	=	0.90	
	ρ	=	0.0360	
	ρ_{max}	=	0.0270	
	d	=	4.9	[cm] ($Mu / \phi \rho fy db^2 (1-0.59 r fy / fc'))^{0.5}$

$Mu = 1/24\ Wu\ Ln^2$ $Mu = 1/9\ Wu\ Ln^2$

$Mu = 1/14\ Wu\ Ln^2$ $Mu = 1/14\ Wu\ Ln^2$

$Vur = 1.15 Wu\ Ln / 2$

d < h OK

Sheck Shear

Existing Unit Shear	vc	=	4.88	[kg/cm²]
Allowable Shear unit	v all	=	8.92	[kg/cm²]
	vc	<	v all	OK
	a try	=	0.8307	[cm]
	As	=	6.180	[cm²]
	a	=	0.8310	[cm]
	j d	=	12.08	[cm]

Check Deflection

Δ all	=	0.56	[cm]	
ρ fy	=	14.0	< 35	[kg/cm²]
I	=	16276	[cm⁴]	
Ec	=	284116	[kg/cm²]	
Δ	=	0.17	[cm] <	Δ all OK
LL = 40 % and Cofficient =		2		
Δ Time	=	0.1	<	Δ all OK

Moment arm

$Mu / \phi fy j$

- Mu L	As L	=	1.46	[cm²]	2 DB12	@ 0.300	OK
+ Mu m	As m	=	4.39	[cm²]	4 DB12	@ 0.250	OK
- Mu R	As R	=	1.46	[cm²]	2 DB12	@ 0.300	OK
Minmum Steel	As min	=	2.50	[cm²]	3 DB12	@ 0.300	OK

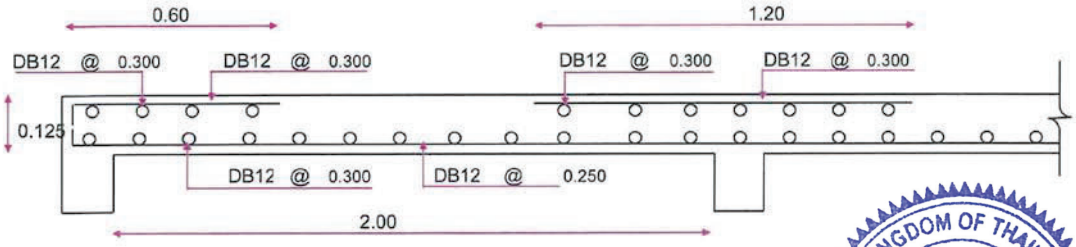

One Way Slab (0.13)

KINGDOM OF THAILAND
CHOKCHAI KHATKHAJORN
โชคชัย ขัดขจร
สย. 4522
REGISTERED PROFESSIONAL ENGINEER

DYNAMIC ENGINEERING CONSULTANT CO., LTD.

ONE WAY SLAB

(Ultimate Stress Design method in accordance with ACI 318-89)

Job No.	:	193018
Rev.	:	0
Initial	:	CKJ
Date	:	6-Aug-20

Slab No. DS-1

Project : อาคารทิศตะวันออก

filename : Slab

Concrete Strength	fc'	=	350	[kg/cm²]
	fy SD	=	4000	[kg/cm²]
	fy RD	=	2400	[kg/cm²]
Clear span Length	Ln	=	340	[cm]
Load	LL	=	800	[kg/ m]
Type of Slab	Simple Support			
Reinforcement Steel	DB12			

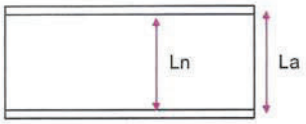

	DL		360	[kg/ m]
Thick of Slab	h	=	15	[cm]
	Wu	=	1864	[kg/ m]
Moment	- Mu L	=	898	[kg-m]
	+ Mu m	=	2693	[kg-m]
	- Mu R	=	898	[kg-m]
Shear	Vur	=	3644	[kg]
	K	=	0.80	
	ϕ	=	0.90	
	ρ	=	0.0360	
	ρ_{max}	=	0.0270	
	d	=	5.8	[cm] ($Mu / \phi \rho fy db^2 (1-0.59 r fy / fc'))^{0.5}$
	d	<	h	OK

$Mu = 1/24\ Wu\ Ln^2$ $Mu = 1/9\ Wu\ Ln^2$

$Mu = 1/14\ Wu\ Ln^2$ $Mu = 1/14\ Wu\ Ln^2$

$Vur = 1.15 Wu\ Ln / 2$

Sheck Shear

Existing Unit Shear	vc	=	3.17	[kg/cm²]
Allowable Shear unit	v all	=	8.92	[kg/cm²]
	vc	<	v all	OK
	a try	=	0.9108	[cm]
	As	=	6.774	[cm²]
	a	=	0.9108	[cm]
	j d	=	14.54	[cm]

Check Deflection

Δ all	=	0.94	[cm]	
ρ fy	=	13.7	<	35 [kg/cm²]
I	=	28125	[cm⁴]	
Ec	=	284116	[kg/cm²]	
Δ	=	0.41	[cm] <	Δ all OK
LL = 40 % and Cofficient =				2
Δ Time	=	0.3	<	Δ all OK

Moment arm

$Mu / \phi fy j$	- Mu L	As L =	1.71	[cm²]	2 DB12	@	0.300	OK
	+ Mu m	As m =	5.14	[cm²]	5 DB12	@	0.200	OK
	- Mu R	As R =	1.71	[cm²]	2 DB12	@	0.300	OK
Minmum Steel		As min =	3.00	[cm²]	3 DB12	@	0.300	OK

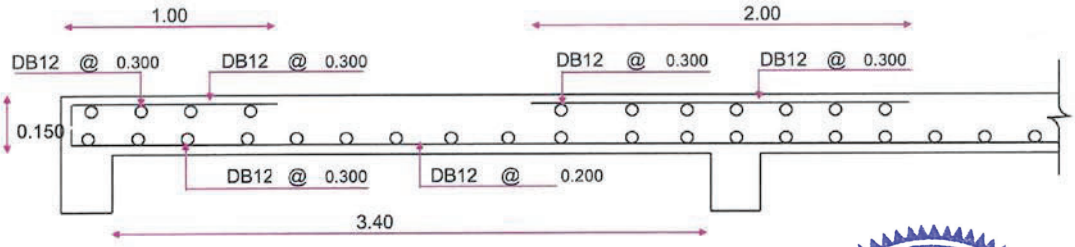

One Way Slab (0.15)

KINGDOM OF THAILAND
CHOKCHAI KHATKHAJORN
โชคชัย ขัดขจร
สย. 4522
REGISTERED PROFESSIONAL ENGINEER

DYNAMIC ENGINEERING CONSULTANT CO., LTD.

ONE WAY SLAB

(Ultimate Stress Design method in accordance with ACI 318-89)

Job No.	:	193018
Rev.	:	0
Initial	:	CKJ
Date	:	6-Aug-20

Slab No. LS-1

Project : อาคารทิศตะวันออก

filename : Slab

Concrete Strength	fc' =	350	[kg/cm²]	
	fy SD =	4000	[kg/cm²]	
	fy RD =	2400	[kg/cm²]	
Clear span Length	Ln =	350	[cm]	
Load	LL =	2000	[kg/ m]	
Type of Slab	Simple Support			
Reinforcement Steel	DB12			

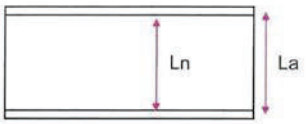

	DL	480	[kg/ m]
Thick of Slab	h =	20	[cm]
	Wu =	4072	[kg/ m]
Moment	- Mu L =	2078	[kg-m]
	+ Mu m =	6235	[kg-m]
	- Mu R =	2078	[kg-m]
Shear	Vur =	8195	[kg]
	K =	0.80	
	ϕ =	0.90	
	ρ =	0.0360	
	ρ_{max} =	0.0270	
	d =	8.9	[cm] ($Mu / \phi \rho fy db^2 (1-0.59 r fy / fc'))^{0.5}$
	d <	h	OK

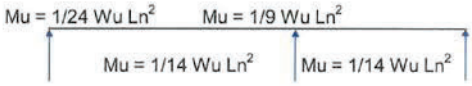

Vur =1.15Wu Ln /2

Sheck Shear

Existing Unit Shear	vc =	4.97	[kg/cm²]
Allowable Shear unit	v all =	8.92	[kg/cm²]
	vc <	v all	OK
	a try =	1.4775	[cm]
	As =	10.989	[cm²]
	a =	1.4775	[cm]
	j d =	19.26	[cm]

Check Deflection

Δ all =	0.97	[cm]		
ρ fy =	18.0	<	35	[kg/cm²]
I =	66667	[cm⁴]		
Ec =	284116	[kg/cm²]		
Δ =	0.42	[cm] <	Δ all	OK
LL = 40 % and Cofficient =			2	
Δ Time =	0.26	<	Δ all	OK

Moment arm

$Mu / \phi fy j$	- Mu L	As L =	3.00	[cm²]	3 DB12	@ 0.250	OK
	+ Mu m	As m =	8.99	[cm²]	8 DB12	@ 0.125	OK
	- Mu R	As R =	3.00	[cm²]	3 DB12	@ 0.250	OK
Minmum Steel		As min =	4.00	[cm²]	4 DB12	@ 0.250	OK

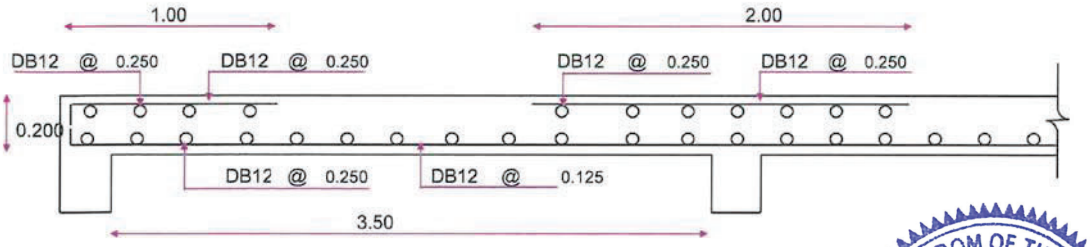

One Way Slab (0.2)

KINGDOM OF THAILAND
CHOKCHAI KHATKHAJORN
โชคชัย ขัดขจร
สย. 4522
REGISTERED PROFESSIONAL ENGINEER

DYNAMIC ENGINEERING CONSULTANT CO., LTD.

Job No.	:	193018
Rev.	:	0
Initial	:	CKJ
Date	:	6-Aug-20

TWO WAY SLAB

(Ultimate Stress Design method in accordance with ACI 318-89)

(Method 2)

Slab No. WS-1

Project : อาคารด้านทิศตะวันออก โซน ซี

Filename : Slab S

Concrete Strength	fc'	=	350	[kg/cm²]
	fy SD	=	4000	[kg/cm²]
	fy RD	=	2400	[kg/cm²]
Thick of Slab	h	=	20	[cm]
Clear span Length	La	=	300	[cm]
	Lb	=	350	[cm]
Live Load	LL	=	2000	[kg/m²]
Finishing Load	FL	=	120	[kg/m²]
0 Siden Continuous	DB12			
	DL	=	480	[kg/ m]
	k	=	0.80	
	ϕ bend	=	0.90	
	ϕ Shear	=	0.85	
Cover (Short Side)	Cc	=	3.0	[cm]
Depth of Slab	d	=	17.0	[cm]
	Wu	=	4240	[kg/ m]
	Lb/La	=	1.17	OK
La/Lb	m	=	0.857	
Shear	Vu S	=	4240	[kg/m]
	Vu L	=	4802	[kg/m]
	Vc all	=	11378	[kg/m]
	Vu L	<	Vc all	OK

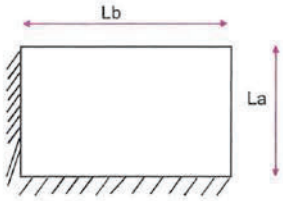

Check h	ρ	=	0.0360	
	ρ_{max}	=	0.0270	
Required d		=	4.9	[cm]
			$(Mu / \phi \rho fy db^2 (1-0.59 \rho fy / fc'))^{0.5}$	
	d	<	17.0	OK
a try		=	0	[cm]
As		=	3.157	[cm²]
a		=	0.4245	[cm]
Moment arm	j d	=	16.79	[cm]

Short Span

					Mu / ϕ fy j d							
Moment	- Continue	Mu	=	0	[kg-m]	As1	=	0.00	[cm²]	1 DB12	@	0.250	OK
	- Not Cont.	Mu	=	0	[kg-m]	As2	=	0.00	[cm²]	1 DB12	@	0.250	OK
	+ Middle	Mu m	=	0	[kg-m]	As3	=	0.00	[cm²]	1 DB12	@	0.250	OK

Long Span

Moment	- Continue	Mu	=	0	[kg-m]	As4	=	0.00	[cm²]	1 DB12	@	0.250	OK
	- Not Cont.	Mu	=	1259	[kg-m]	As5	=	2.08	[cm²]	2 DB12	@	0.250	OK
	+ Middle	Mu m	=	1908	[kg-m]	As6	=	3.16	[cm²]	3 DB12	@	0.250	OK
	Minimum Steel					As min	=	4.00	[cm²]	4 DB12	@	0.250	OK

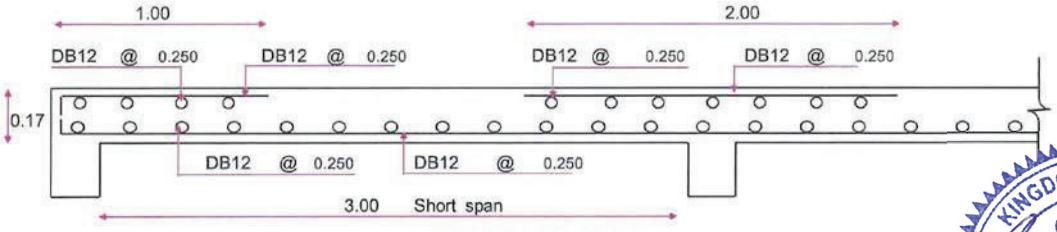

Two Way Slab (0.20)

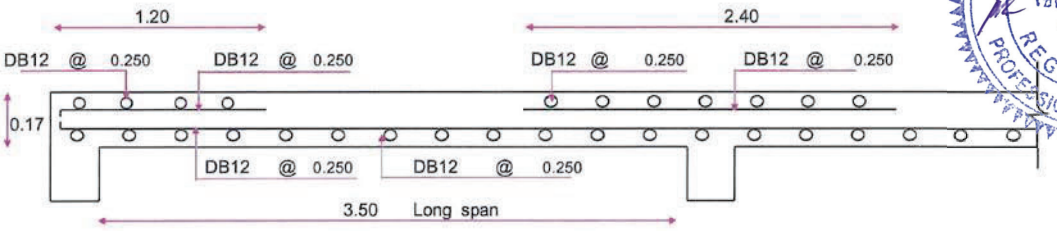

Two Way Slab (0.20)

KINGDOM OF THAILAND
CHOKCHAI KHATKHAJORN
โชคชัย ขัดขจร
สย. 4522
REGISTERED PROFESSIONAL ENGINEER

DYNAMIC ENGINEERING CONSULTANTS CO., LTD.
281 SOI PHANIT ANAN 7 SUKHUMVIT 71
BANGKOK 10110
PHONE: (66-2) 713-3888, FAX: (66-2) 713-3889

Project No.	: 193018	Date :	8/6/2020
Project Name	: อาคารทิศตะวันออก		
Subject	: WALL TANK		
Made by	: โชคชัย	Checked by :	โชคชัย

Member : WW 1 **SLAB DESIGN (USD)**

Pile Size	=	0.00	cm.	Conc. fc'		350	kg / cm^2		
Hight, H	=	3.00	m.	Steel fy		4000	kg / cm^2		
Water Load	=	1000	kg / m^2	β_1	=	0.80	R =	73.57	kg / cm^2
Soil Load	=	0	kg / m^2	ρ_b	=	0.036	ϕM_n =	14898	kg-m / m
W_U = 1.4W	=	2072	kg / m^2	Cover (Short Side)			=	5.00	cm
Thickness	=	20.0	cm	Cover (Long Side)			=	5.00	cm
M-pos.	=	1243	kg-m / m	Required Thickness			=	9.33	cm
Max. Shear	=	3108	kg / m	Required d			=	4.33	cm

Reinforcement

ρ = 0.85*(fc' / fy) * (1-(SQR(1-(236*Mu/(ϕbd^{2}fc'))))

= 0.0016

Section Area of Steel

As.pos. = 3.11 (cm^2 / m)

As_{min} = 3.60 (cm^2 / m)

Temparature Steel

As. = 3.60 (cm^2 / m)

Bottom Steel As-pos.		Top Steel As-neg.	
Diameter (mm.)	Spacing(m.)	Diameter (mm.)	Spacing(m.)
12	0.31	12	0.31
16	0.56	16	0.56
20	0.87	20	0.87
25	1.36	25	1.36
Use Diameter =	12 mm.	Use Diameter =	12 mm.

Check Beam Shear :

V_U = 3108 kg / m

ϕV_c = 12642 kg / m OK

Check Punching Shear

V_{up} = 3108 kg / m

ϕV_p = 7585 kg / m OK

KINGDOM OF THAILAND
CHOKCHAI KHATKHAJORN
โชคชัย ขัดขจร
สน. 4522
REGISTERED PROFESSIONAL ENGINEER

DYNAMIC ENGINEERING CONSULTANT CO., LTD.

Job No.	:	193018
Rev.	:	0
Initial	:	CKJ
Date	:	12-Nov-20

TWO WAY SLAB

(Ultimate Stress Design method in accordance with ACI 318)

(Method 2)

Slab No. FS-1

Project : อาคารด้านทิศตะวันออก

Filename : Slab S

Concrete Strength	fc'	=	350	[kg/cm²]
	fy SD	=	4000	[kg/cm²]
	fy RD	=	2400	[kg/cm²]
Thick of Slab	h	=	27.5	[cm]
Clear span Length	La	=	800	[cm]
	Lb	=	840	[cm]
Live Load	LL	=	1500	[kg/m²]
Finishing Load	FL	=	120	[kg/m²]

4 Siden Continuous | DB16

	DL	=	660	[kg/m]
	k	=	0.80	
	ϕ bend	=	0.90	
	ϕ Shear	=	0.85	
Cover (Short Side)	Cc	=	4.0	[cm]
Depth of Slab	d	=	23.5	[cm]
	Wu	=	3642	[kg/m]
	Lb/La	=	1.05	OK
La/Lb	m	=	0.952	
Shear	Vu S	=	9712	[kg/m]
	Vu L	=	10163	[kg/m]
	Vc all	=	16856	[kg/m]

Vu L < Vc all OK

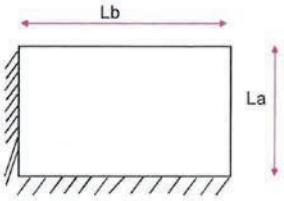

Check h	ρ	=	0.0360	
	ρ_{max}	=	0.0270	
Required	d	=	10.8	[cm]

$(Mu / \phi \rho fy db^2 (1-0.59 \rho fy / fc'))^{0.5}$

d < 23.5 OK

	a try	=	2	[cm]
	As	=	11.392	[cm²]
	a	=	1.5317	[cm]
Moment arm	j d	=	22.73	[cm]

Short Span

Mu / ϕ fy j d

Moment	- Continue	Mu	=	9324	[kg-m]	As1	=	11.39	[cm²]	6 DB16	@	0.150	OK
	- Not Cont.	Mu	=	0	[kg-m]	As2	=	0.00	[cm²]	1 DB16	@	0.300	OK
	+ Middle	Mu m	=	6604	[kg-m]	As3	=	8.07	[cm²]	5 DB16	@	0.200	OK

Long Span

Moment	- Continue	Mu	=	8857	[kg-m]	As4	=	10.82	[cm²]	6 DB16	@	0.150	OK
	- Not Cont.	Mu	=	0	[kg-m]	As5	=	0.00	[cm²]	1 DB16	@	0.300	OK
	+ Middle	Mu m	=	5827	[kg-m]	As6	=	7.12	[cm²]	4 DB16	@	0.250	OK
	Minimum Steel					As min	=	5.50	[cm²]	3 DB16	@	0.300	OK

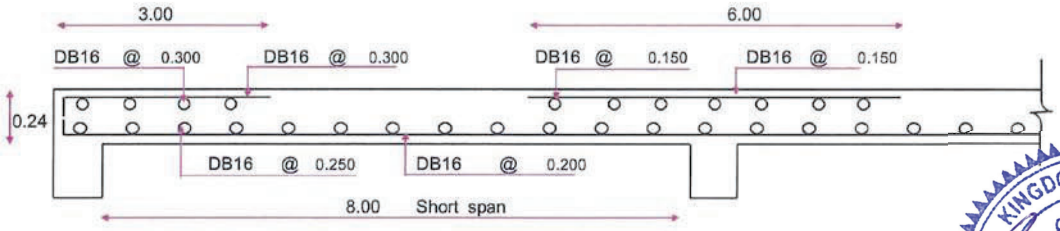

Two Way Slab (0.28)

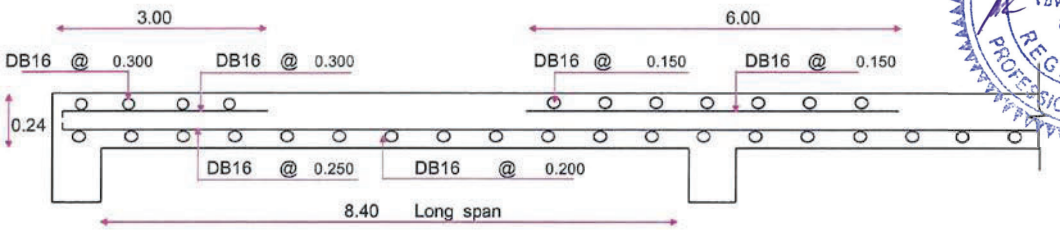

Two Way Slab (0.28)

KINGDOM OF THAILAND
CHOKCHAI KHATKHAJORN
โชคชัย ขัดขจร
สย. 4522
REGISTERED PROFESSIONAL ENGINEER

DYNAMIC ENGINEERING CONSULTANT CO., LTD.

ONE WAY SLAB

(Ultimate Stress Design method in accordance with ACI 318)

Job No.	:	193018
Rev.	:	0
Initial	:	CKJ
Date	:	12-Nov-20

Slab No. GUS-1

Project : อาคารทิศตะวันออก

filename : Slab

Concrete Strength	fc' =	350	[kg/cm²]	
	fy SD =	4000	[kg/cm²]	
	fy RD =	2400	[kg/cm²]	
Clear span Length	Ln =	150	[cm]	
Load	LL =	1500	[kg/ m]	
Type of Slab		Cantilevre		
Reinforcement Steel		DB12		

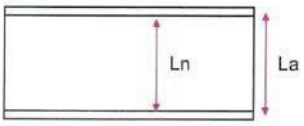

	DL	480	[kg/ m]
Thick of Slab	h =	20	[cm]
	Wu =	3222	[kg/ m]
Moment	- Mu L =	3625	[kg-m]
	+ Mu m =	0	[kg-m]
	- Mu R =	0	[kg-m]
Shear	Vur =	2779	[kg]
	K =	0.80	
	ϕ =	0.90	
	ρ =	0.0360	
	ρmax =	0.0270	
	d =	6.8	[cm] ($Mu / \phi \rho fy db^2 (1-0.59 r fy / fc'))^{0.5}$
	d < h	OK	

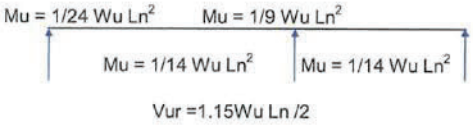

Sheck Shear

Existing Unit Shear	vc =	1.68	[kg/cm²]
Allowable Shear unit	v all =	8.92	[kg/cm²]
	vc < v all	OK	
	a try =	0.8419	[cm]
	As =	6.262	[cm²]
	a =	0.8420	[cm]
	j d =	19.58	[cm]

Check Deflection

Δ all =	0.42	[cm]	
ρ fy =	10.3 <	35	[kg/cm²]
I =	66667	[cm⁴]	
Ec =	284116	[kg/cm²]	
Δ =	0.01	[cm] <	Δ all OK
LL = 40 % and Cofficient =		2	
Δ Time =	0.01	<	Δ all OK

Moment arm

Mu / ϕ fy j	- Mu L	As L =	5.14	[cm²]	5 DB12	@ 0.200	OK
	+ Mu m	As m =	0.00	[cm²]	1 DB12	@ 0.500	OK
	- Mu R	As R =	0.00	[cm²]	1 ---	--- ---	OK
Minmum Steel		As min =	4.00	[cm²]	4 DB12	@ 0.250	OK

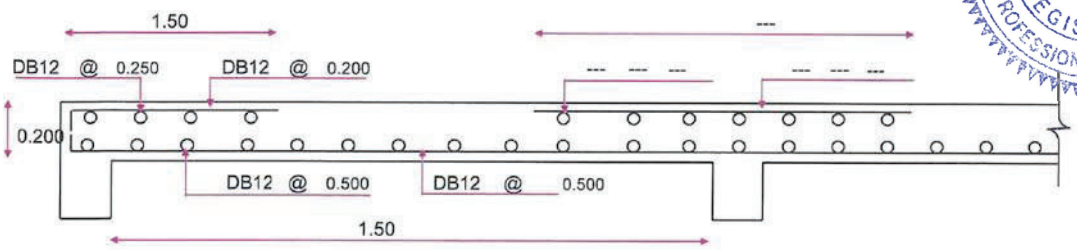

One Way Slab (0.2)

KINGDOM OF THAILAND
CHOKCHAI KHATKHAJORN
โชคชัย ขัดขจร
สย. 4522
REGISTERED PROFESSIONAL ENGINEER

DYNAMIC ENGINEERING CONSULTANT CO., LTD.

Job No.	:	193018
Rev.	:	0
Initial	:	CKJ
Date	:	12-Nov-20

TWO WAY SLAB

(Ultimate Stress Design method in accordance with ACI 318-89)

(Method 2)

Slab No. RS-1

Project : อาคารด้านทิศตะวันออก โซน ซี

Filename : Slab S

Concrete Strength	fc'	=	350	[kg/cm²]
	fy SD	=	4000	[kg/cm²]
	fy RD	=	2400	[kg/cm²]
Thick of Slab	h	=	15	[cm]
Clear span Length	La	=	500	[cm]
	Lb	=	540	[cm]
Live Load	LL	=	200	[kg/m²]
Finishing Load	FL	=	120	[kg/m²]

0 Siden Continuous | DB12

	DL	=	360	[kg/ m]
	k	=	0.80	
	ϕ bend	=	0.90	
	ϕ Shear	=	0.85	
Cover (Short Side)	Cc	=	3.0	[cm]
Depth of Slab	d	=	12.0	[cm]
	Wu	=	1012	[kg/ m]
	Lb/La	=	1.08	OK
La/Lb	m	=	0.926	
Shear	Vu S	=	1687	[kg/m]
	Vu L	=	1807	[kg/m]
	Vc all	=	7164	[kg/m]

Vu L < Vc all OK

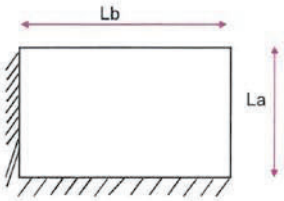

Check h	ρ	=	0.0360	
	ρ_{max}	=	0.0270	
Required	d	=	4.0	[cm]

$(Mu / \phi \rho fy db^2 (1-0.59 \rho fy / fc'))^{0.5}$

d < 12.0 OK

	a try	=	0	[cm]
	As	=	2.978	[cm²]
	a	=	0.4004	[cm]
Moment arm	j d	=	11.80	[cm]

Short Span

Mu / ϕ fy j d

Moment	- Continue	Mu	=	0	[kg-m]	As1	=	0.00	[cm²]	1 DB12	@	0.300	OK
	- Not Cont.	Mu	=	0	[kg-m]	As2	=	0.00	[cm²]	1 DB12	@	0.300	OK
	+ Middle	Mu m	=	0	[kg-m]	As3	=	0.00	[cm²]	1 DB12	@	0.300	OK

Long Span

Moment	- Continue	Mu	=	0	[kg-m]	As4	=	0.00	[cm²]	1 DB12	@	0.300	OK
	- Not Cont.	Mu	=	835	[kg-m]	As5	=	1.97	[cm²]	2 DB12	@	0.300	OK
	+ Middle	Mu m	=	1265	[kg-m]	As6	=	2.98	[cm²]	3 DB12	@	0.300	OK
	Minimum Steel					As min	=	3.00	[cm²]	3 DB12	@	0.300	OK

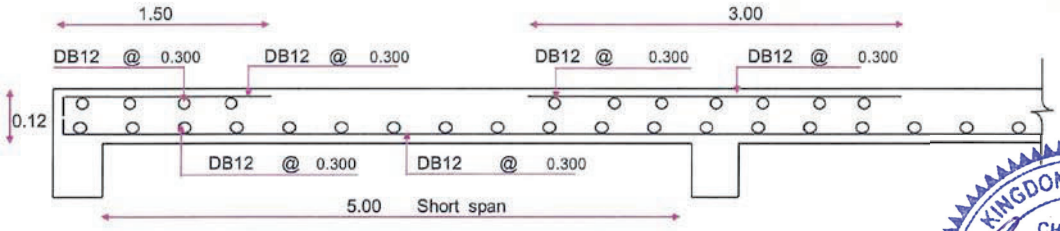

Two Way Slab (0.15)

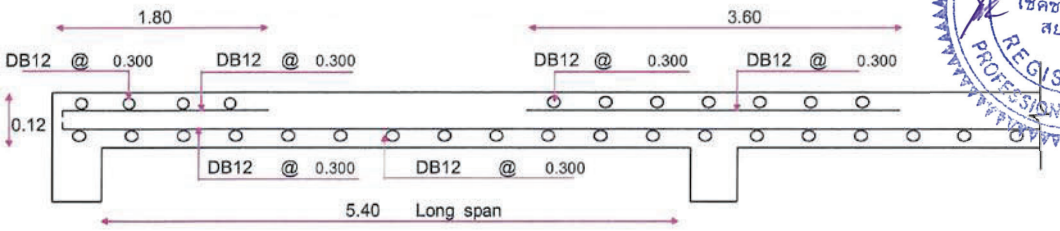

Two Way Slab (0.15)

KINGDOM OF THAILAND
CHOKCHAI KHATKHAJORN
โชคชัย ขัดขจร
สย. 4522
REGISTERED PROFESSIONAL ENGINEER

DYNAMIC ENGINEERING CONSULTANT CO., LTD.

TWO WAY SLAB

(Ultimate Stress Design method in accordance with ACI 318-89)

(Method 2)

Job No.	:	193018
Rev.	:	0
Initial	:	CKJ
Date	:	12-Nov-20

Slab No. RS-2

Project : อาคารด้านทิศตะวันออก โซน ซี

Filename : Slab S

Concrete Strength	fc'	=	350	[kg/cm²]
	fy SD	=	4000	[kg/cm²]
	fy RD	=	2400	[kg/cm²]
Thick of Slab	h	=	15	[cm]
Clear span Length	La	=	540	[cm]
	Lb	=	800	[cm]
Live Load	LL	=	200	[kg/m²]
Finishing Load	FL	=	120	[kg/m²]

0 Siden Continuous | DB12

	DL	=	360	[kg/ m]
	k	=	0.80	
	ϕ bend	=	0.90	
	ϕ Shear	=	0.85	
Cover (Short Side)	Cc	=	3.0	[cm]
Depth of Slab	d	=	12.0	[cm]
	Wu	=	1012	[kg/ m]
	Lb/La	=	1.48	OK
La/Lb	m	=	0.675	
Shear	Vu S	=	1822	[kg/m]
	Vu L	=	2317	[kg/m]
	Vc all	=	7164	[kg/m]

Vu L < Vc all OK

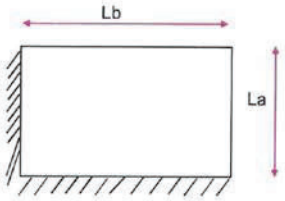

Check h	ρ	=	0.0360	
	ρ_{max}	=	0.0270	
Required d		=	4.3	[cm]

$(Mu / \phi \rho fy db^2 (1-0.59 \rho fy / fc'))^{0.5}$

d < 12.0 OK

	a try	=	0	[cm]
	As	=	3.483	[cm²]
	a	=	0.4684	[cm]
Moment arm	j d	=	11.77	[cm]

Short Span

Mu / ϕ fy j d

Moment	- Continue	Mu	=	0	[kg-m]	As1	=	0.00	[cm²]	1 DB12	@	0.300	OK
	- Not Cont.	Mu	=	0	[kg-m]	As2	=	0.00	[cm²]	1 DB12	@	0.300	OK
	+ Middle	Mu m	=	0	[kg-m]	As3	=	0.00	[cm²]	1 DB12	@	0.300	OK

Long Span

Moment	- Continue	Mu	=	0	[kg-m]	As4	=	0.00	[cm²]	1 DB12	@	0.300	OK
	- Not Cont.	Mu	=	974	[kg-m]	As5	=	2.30	[cm²]	3 DB12	@	0.300	OK
	+ Middle	Mu m	=	1475	[kg-m]	As6	=	3.48	[cm²]	4 DB12	@	0.250	OK
	Minimum Steel					As min	=	3.00	[cm²]	3 DB12	@	0.300	OK

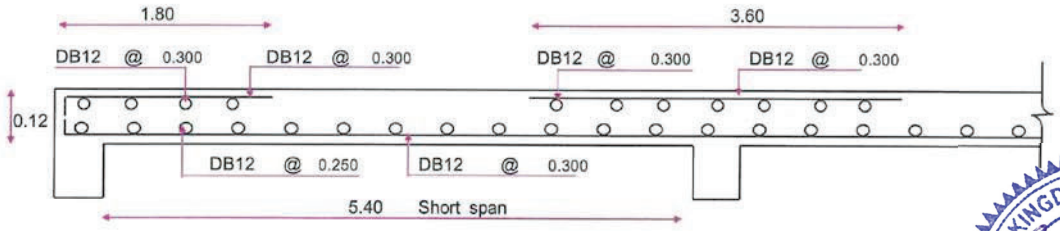

Two Way Slab (0.15)

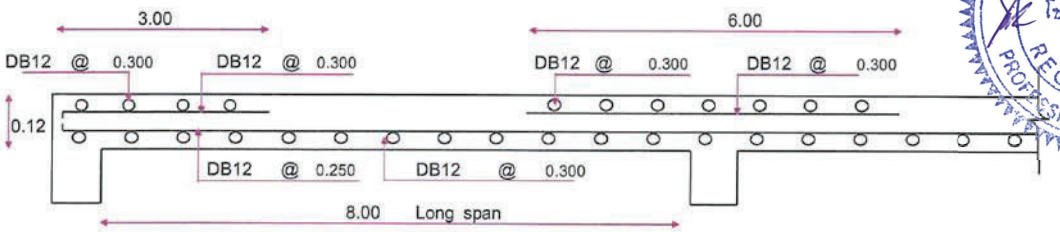

Two Way Slab (0.15)

KINGDOM OF THAILAND
CHOKCHAI KHATKHAJORN
โชคชัย ขัดขจร
สย. 4522
REGISTERED PROFESSIONAL ENGINEER

รายงานการออกแบบ Design Note รายการคำนวณงานโครงสร้าง
(สัญญาก่อสร้างอาคารทิศตะวันออก Final Detailed Design)
โครงการพัฒนาพื้นที่ส่วนขยายศูนย์ราชการเฉลิมพระเกียรติ ๘๐ พรรษา ๕ ธันวาคม ๒๕๕๐ พื้นที่โซน C

5. รายการคำนวณคาน

KINGDOM OF THAILAND
CHOKCHAI KHATKHAJORN
โชคชัย ขัดขจร
สย. 4522
REGISTERED PROFESSIONAL ENGINEER

GCDT
GOVERNMENT CENTER DESIGN TEAM

DYNAMIC ENGINEERING CONSULTANT CO., LTD.	Job No.	193018
Design Reinforced Concrete Beam	Rev.	1
(Ultimate Stress Design method in accordance with ACI 318-89)	Initial	CKJ
Beam No. B-1	Date	13-Aug-20
Project : อาคารทิศตะวันออก	File	Beam B

	fc'	=	350	[kg/cm^2]
	fy SD	=	4000	[kg/cm^2]
	fy SR	=	2400	[kg/cm^2]
$M_{-pos.}$	Mu^+	=	187	[kg-m]
$M_{-neg.}$	Mu^-	=	0	[kg-m]
$V_{max.}$	Vu	=	750	[kg]
	DL	=	1160	[kg/m]
	LL	=	340	[kg/m]
Length	Ln	=	100	[cm]
width	b	=	15	[cm]
depth	t	=	30	[cm]
	d'	=	5	[cm]
siding	d"	=	3.5	[cm]

For Positive Moment :

Upper Steel	DB 12
Lower Steel	DB 12
Stirrup Steel	RB 9

d	=	25	[cm]
a try	=	0.1762	[cm]
As	=	0.209	[cm^2]
a	=	**0.1869**	[cm]
ϕ Bend	=	0.90	
ϕ Shea	=	0.85	
k1	=	0.80	
Es	=	2040000	[kg/cm^2]
Ec	=	284553	[kg/cm^2]
n	=	7	
ρ	=	0.0360	
ρ_{max}	=	0.0270	
As	=	10.118	[cm^2]
a	=	9.069	[cm]
Mu	=	7454	[kg-m]
M1	=	0	[kg-m]
As'	=	0.0000	[cm^2]
No. of steel	=	**2**	
As	=	2.26	[cm^2]
Σ As	=	0.209	[cm^2]
No. of steel	=	**2**	
As	=	2.26	[cm^2]

Section OK

Stirrup Design

$0.53\ \phi\ (fc')^{0.5}$ bd	=	3346	[kg]
L=Ln/2(Vu - ϕ Vc)/Vu	=	-139.6	[cm]
S	=	-24.992	[cm]
Used Stirrup		RB 9 @ #N/A	#N/A

For Negative Moment :

Upper Steel	DB 12
Lower Steel	DB 12
Stirrup Steel	RB 9

d	=	25	[cm]
a try	=	8.7110	[cm]
As	=	0.000	[cm^2]
a	=	**0.1869**	[cm]
ϕ Bend	=	0.90	
ϕ Shea	=	0.85	
k1	=	1.05	
Es	=	2040000	[kg/cm^2]
Ec	=	284553	[kg/cm^2]
n	=	7	
ρ	=	0.0472	
ρ_{max}	=	0.0354	
As	=	13.280	[cm^2]
a	=	11.904	[cm]
Mu	=	9107	[kg-m]
M1	=	0	[kg-m]
As'	=	0.0000	[cm^2]
No. of steel	=	**2**	
As	=	2.26	[cm^2]
Σ As	=	0.000	[cm^2]
No. of steel	=	**2**	
As	=	2.26	[cm^2]

Section OK

Check Deflection

Δ all	=	0.28	[cm]		
ρ fy	=	24	<	35	[kg/cm^2]
Y'	=	6.5			
I	=	19531	[cm^4]		
Ec	=	284116	[kg/cm^2]		
Δ	=	0.00 [cm]	<	Δ all	OK
Δ Time	=	0	<	Δ all	OK

KINGDOM OF THAILAND
CHOKCHAI KHATKHAJORN
โชคชัย ขัดขจร
สย. 4522
REGISTERED PROFESSIONAL ENGINEER

DYNAMIC ENGINEERING CONSULTANT CO., LTD.		Job No.	193018
Design Reinforced Concrete Beam		Rev.	1
(Ultimate Stress Design method in accordance with ACI 318-89)		Initial	CKJ
Beam No.	B-1	Date	13-Aug-20
Project :	อาคารทิศตะวันออก	File	Beam B

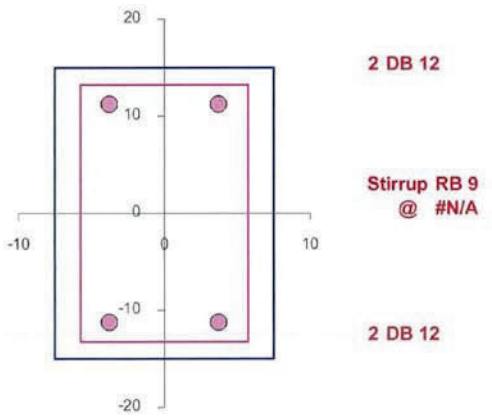

Positive Section

B-1 (15 X 30)

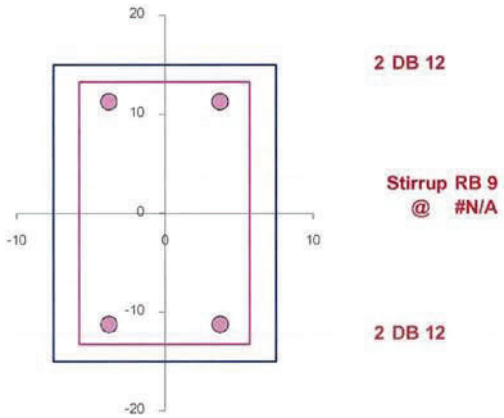

Negative Section

B-1 (15 X 30)

KINGDOM OF THAILAND
CHOKCHAI KHATKHAJORN
โชคชัย ขัดขจร
สย. 4522
REGISTERED PROFESSIONAL ENGINEER

DYNAMIC ENGINEERING CONSULTANT CO., LTD.		Job No.	193018
Design Reinforced Concrete Beam		Rev.	1
(Ultimate Stress Design method in accordance with ACI 318-89)		Initial	CKJ
Beam No.	B-2	Date	13-Aug-20
Project :	อาคารทิศตะวันออก	File	Beam B

	fc'	=	350	[kg/cm^2]
	fy SD	=	4000	[kg/cm^2]
	fy SR	=	2400	[kg/cm^2]
$M_{+pos.}$	Mu^+	=	4134	[kg-m]
$M_{-neg.}$	Mu^-	=	4134	[kg-m]
$V_{max.}$	Vu	=	4725	[kg]
	DL	=	1510	[kg/m]
	LL	=	1190	[kg/m]
Length	Ln	=	350	[cm]
width	b	=	20	[cm]
depth	t	=	40	[cm]
	d'	=	5	[cm]
siding	d"	=	3.5	[cm]

For Positive Moment :

Upper Steel	DB 16
Lower Steel	DB 16
Stirrup Steel	RB 9

d	=	35	[cm]
a try	=	2.2799	[cm]
As	=	3.391	[cm^2]
a	=	**2.2799**	[cm]
ϕ Bend	=	0.90	
ϕ Shea	=	0.85	
k1	=	0.80	
Es	=	2040000	[kg/cm^2]
Ec	=	284553	[kg/cm^2]
n	=	7	
ρ	=	0.0360	
ρ_{max}	=	0.0270	
As	=	18.887	[cm^2]
a	=	12.697	[cm]
Mu	=	19481	[kg-m]
M1	=	0	[kg-m]
As'	=	0.0000	[cm^2]
No. of steel	=	**2**	
As	=	4.02	[cm^2]
Σ As	=	3.391	[cm^2]
No. of steel	=	**2**	
As	=	4.02	[cm^2]

Section OK

Stirrup Design

$0.53\ \phi\ (fc')^{0.5}\ bd$	=	6247	[kg]
L=Ln/2(Vu - ϕ Vc)/Vu	=	-21.7	[cm]
S	=	-59.700	[cm]
Used Stirrup		RB 9 @ #N/A	#N/A

For Negative Moment :

Upper Steel	DB 16
Lower Steel	DB 16
Stirrup Steel	RB 9

d	=	35	[cm]
a try	=	8.7110	[cm]
As	=	3.391	[cm^2]
a	=	**2.2799**	[cm]
ϕ Bend	=	0.90	
ϕ Shea	=	0.85	
k1	=	1.05	
Es	=	2040000	[kg/cm^2]
Ec	=	284553	[kg/cm^2]
n	=	7	
ρ	=	0.0472	
ρ_{max}	=	0.0354	
As	=	24.789	[cm^2]
a	=	16.665	[cm]
Mu	=	23798	[kg-m]
M1	=	0	[kg-m]
As'	=	0.0000	[cm^2]
No. of steel	=	**2**	
As	=	4.02	[cm^2]
Σ As	=	3.391	[cm^2]
No. of steel	=	**2**	
As	=	4.02	[cm^2]

Section OK

Check Deflection

Δ all	=	0.97	[cm]		
ρ fy	=	23	<	35	[kg/cm^2]
Y'	=	8.62			
I	=	71458	[cm^4]		
Ec	=	284116	[kg/cm^2]		
Δ	=	0.26	[cm] <	Δ all	OK
Δ Time	=	0.15	<	Δ all	OK

KINGDOM OF THAILAND
CHOKCHAI KHATKHAJORN
โชคชัย ขัดขจร
สย. 4522
REGISTERED PROFESSIONAL ENGINEER

DYNAMIC ENGINEERING CONSULTANT CO., LTD.		Job No.	193018
Design Reinforced Concrete Beam		Rev.	1
(Ultimate Stress Design method in accordance with ACI 318-89)		Initial	CKJ
Beam No.	B-2	Date	13-Aug-20
Project :	อาคารทิศตะวันออก	File	Beam B

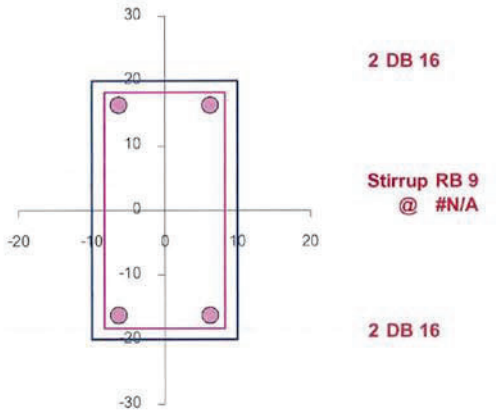

Positive Section

B-2 (20 X 40)

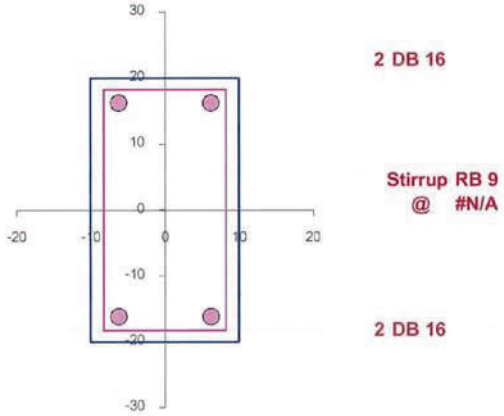

Negative Section

B-2 (20 X 40)

KINGDOM OF THAILAND
CHOKCHAI KHATKHAJORN
โชคชัย ขัดขจร
สย. 4522
REGISTERED PROFESSIONAL ENGINEER

DYNAMIC ENGINEERING CONSULTANT CO., LTD.

Design Reinforced Concrete Beam

(Ultimate Stress Design method in accordance with ACI 318-89)

Job No.	193018	Beam No.	B-3
Rev.	1	Project :	อาคารทิศตะวันออก
Initial	CKJ		
Date	13-Aug-20		
File	Beam B		

	fc'	=	350	[kg/cm^2]
	fy SD	=	4000	[kg/cm^2]
	fy SR	=	2400	[kg/cm^2]
$M_{-pos.}$	Mu^+	=	4900	[kg-m]
$M_{-neg.}$	Mu^-	=	4900	[kg-m]
$V_{max.}$	Vu	=	5600	[kg]
	DL	=	1850	[kg/m]
	LL	=	1350	[kg/m]
Length	Ln	=	335	[cm]
width	b	=	30	[cm]
depth	t	=	40	[cm]
	d'	=	5	[cm]
siding	d''	=	3.5	[cm]

For Positive Moment :

Upper Steel: DB 16
Lower Steel: DB 16
Stirrup Steel: RB 9

d	=	35	[cm]
a try	=	1.7886	[cm]
As	=	3.991	[cm^2]
a	=	**1.7886**	[cm]
ϕ Bend	=	0.90	
ϕ Shea	=	0.85	
k1	=	0.80	
Es	=	2040000	[kg/cm^2]
Ec	=	284553	[kg/cm^2]
n	=	7	
ρ	=	0.0360	
ρ_{max}	=	0.0270	
As	=	28.331	[cm^2]
a	=	12.697	[cm]
Mu	=	29222	[kg-m]
M1	=	0	[kg-m]
As'	=	0.0000	[cm^2]
No. of steel	=	**2**	
As	=	4.02	[cm^2]
Σ As	=	3.991	[cm^2]
No. of steel	=	**2**	
As	=	4.02	[cm^2]

Section OK

Stirrup Design

$0.53\ \phi\ (fc')^{0.5}\ bd$	=	9370	[kg]
L=Ln/2(Vu - ϕ Vc)/Vu	=	-70.7	[cm]
S	=	-24.097	[cm]

Used Stirrup RB 9 @ #N/A #N/A

For Negative Moment :

Upper Steel: DB 16
Lower Steel: DB 16
Stirrup Steel: RB 9

d	=	35	[cm]
a try	=	8.7110	[cm]
As	=	3.991	[cm^2]
a	=	**1.7886**	[cm]
ϕ Bend	=	0.90	
ϕ Shea	=	0.85	
k1	=	1.05	
Es	=	2040000	[kg/cm^2]
Ec	=	284553	[kg/cm^2]
n	=	7	
ρ	=	0.0472	
ρ_{max}	=	0.0354	
As	=	37.184	[cm^2]
a	=	16.665	[cm]
Mu	=	35698	[kg-m]
M1	=	0	[kg-m]
As'	=	0.0000	[cm^2]
No. of steel	=	**2**	
As	=	4.02	[cm^2]
Σ As	=	3.991	[cm^2]
No. of steel	=	**2**	
As	=	4.02	[cm^2]

Section OK

Check Deflection

Δ all	=	0.93	[cm]		
ρ fy	=	15	<	35	[kg/cm^2]
Y'	=	7.22			
I	=	107188	[cm^4]		
Ec	=	284116	[kg/cm^2]		
Δ	=	0.17	[cm] <	Δ all	OK
Δ Time	=	0.1	<	Δ all	OK

KINGDOM OF THAILAND
CHOKCHAI KHATKHAJORN
โชคชัย ขัดขจร
สย. 4522
REGISTERED PROFESSIONAL ENGINEER

DYNAMIC ENGINEERING CONSULTANT CO., LTD.	Job No.	193018
Design Reinforced Concrete Beam	Rev.	1
(Ultimate Stress Design method in accordance with ACI 318-89)	Initial	CKJ
Beam No. B-3	Date	13-Aug-20
Project : อาคารทิศตะวันออก	File	Beam B

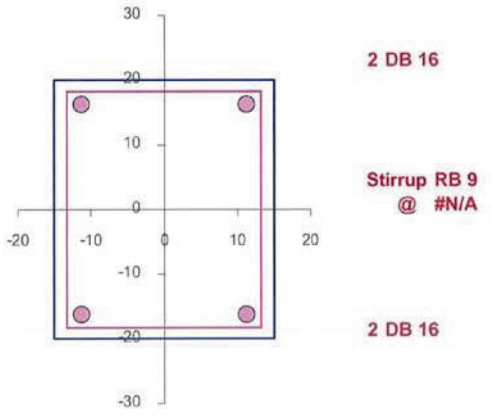

Positive Section

B-3 (30 X 40)

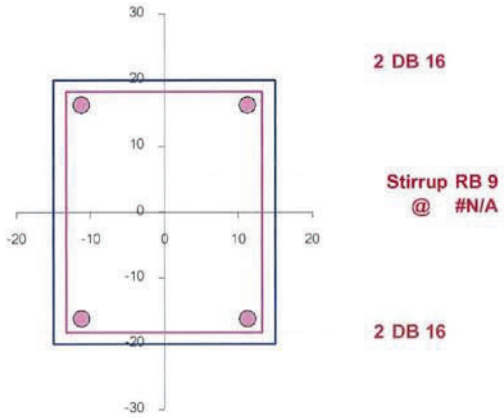

Negative Section

B-3 (30 X 40)

KINGDOM OF THAILAND
CHOKCHAI KHATKHAJORN
โชคชัย ขัดขจร
สย. 4522
REGISTERED PROFESSIONAL ENGINEER

DYNAMIC ENGINEERING CONSULTANT CO., LTD.

Design Reinforced Concrete Beam

(Ultimate Stress Design method in accordance with ACI 318-89)

Job No.	193018	Beam No.	B-3A
Rev.	1	Project :	อาคารทิศตะวันออก
Initial	CKJ		
Date	13-Aug-20		
File	Beam B		

	fc'	=	350	[kg/cm^2]
	fy SD	=	4000	[kg/cm^2]
	fy SR	=	2400	[kg/cm^2]
$M_{-pos.}$	Mu^+	=	31818	[kg-m]
$M_{-neg.}$	Mu^-	=	31818	[kg-m]
$V_{max.}$	Vu	=	21265	[kg]
	DL	=	4430	[kg/m]
	LL	=	1470	[kg/m]
Length	Ln	=	610	[cm]
width	b	=	25	[cm]
depth	t	=	60	[cm]
	d'	=	5	[cm]
siding	d"	=	3.5	[cm]

For Positive Moment :

Upper Steel	DB 25
Lower Steel	DB 25
Stirrup Steel	RB 9

	d	=	55	[cm]
	a try	=	9.4553	[cm]
	As	=	17.581	[cm^2]
	a	=	**9.4553**	[cm]
	ϕ Bend	=	0.90	
	ϕ Shea	=	0.85	
	k1	=	0.80	
	Es	=	2040000	[kg/cm^2]
	Ec	=	284553	[kg/cm^2]
	n	=	7	
	ρ	=	0.0360	
	ρ_{max}	=	0.0270	
	As	=	37.099	[cm^2]
	a	=	19.953	[cm]
	Mu	=	60133	[kg-m]
	M1	=	0	[kg-m]
	As'	=	0.0000	[cm^2]
No. of steel		=	**2**	
	As	=	9.82	[cm^2]
	Σ As	=	17.581	[cm^2]
No. of steel		=	**4**	
	As	=	19.63	[cm^2]

Section OK

Stirrup Design

$0.53\ \phi\ (fc')^{0.5}$ bd	=	12270	[kg]	
L=Ln/2(Vu - ϕ Vc)/Vu	=	155.4	[cm]	
S	=	15.871	[cm]	
Used Stirrup	2	**RB 9 @ 0.150**		**OK**

For Negative Moment :

Upper Steel	DB 25
Lower Steel	DB 25
Stirrup Steel	RB 9

	d	=	55	[cm]
	a try	=	8.7110	[cm]
	As	=	17.581	[cm^2]
	a	=	**9.4553**	[cm]
	ϕ Bend	=	0.90	
	ϕ Shea	=	0.85	
	k1	=	1.05	
	Es	=	2040000	[kg/cm^2]
	Ec	=	284553	[kg/cm^2]
	n	=	7	
	ρ	=	0.0472	
	ρ_{max}	=	0.0354	
	As	=	48.693	[cm^2]
	a	=	26.188	[cm]
	Mu	=	73459	[kg-m]
	M1	=	0	[kg-m]
	As'	=	0.0000	[cm^2]
No. of steel		=	**2**	
	As	=	9.82	[cm^2]
	Σ As	=	17.581	[cm^2]
No. of steel		=	**4**	
	As	=	19.63	[cm^2]

Section OK

Check Deflection

Δ all	=	1.69	[cm]		
ρ fy	=	57	>	35	[kg/cm^2]
Y'	=	19.7			
I	=	234980	[cm^4]		
Ec	=	284116	[kg/cm^2]		
Δ	=	1.59	[cm] <	Δ all	**OK**
Δ Time	=	1.08	<	Δ all	**OK**

KINGDOM OF THAILAND
CHOKCHAI KHATKHAJORN
โชคชัย ขัดขจร
สย. 4522
REGISTERED PROFESSIONAL ENGINEER

DYNAMIC ENGINEERING CONSULTANT CO., LTD.		Job No.	193018
Design Reinforced Concrete Beam		Rev.	1
(Ultimate Stress Design method in accordance with ACI 318-89)		Initial	CKJ
Beam No.	B-3A	Date	13-Aug-20
Project :	อาคารทิศตะวันออก	File	Beam B

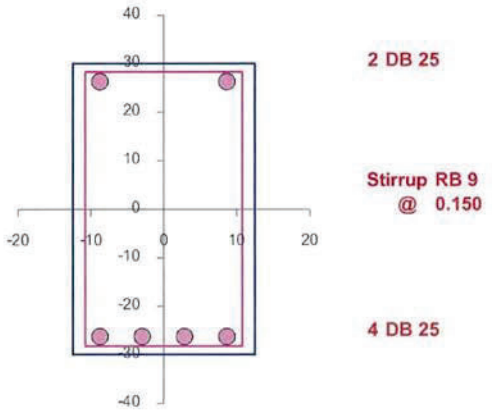

Positive Section
B-3A (25 X 60)

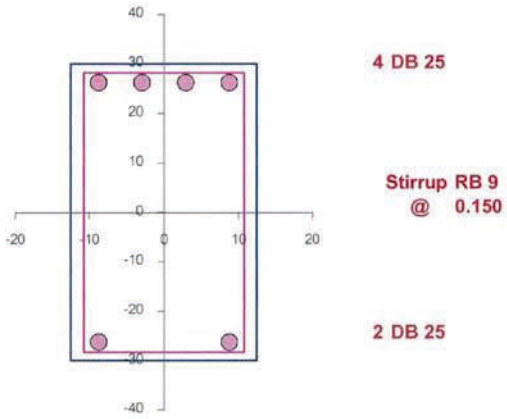

Negative Section
B-3A (25 X 60)

KINGDOM OF THAILAND
CHOKCHAI KHATKHAJORN
โชคชัย ขัดขจร
สย. 4522
REGISTERED PROFESSIONAL ENGINEER

DYNAMIC ENGINEERING CONSULTANT CO., LTD.

RC-I EXCEL — **Ultimate Stress Design method in accordance with ACI 318-89**

Design Reinforced Concrete Beam

Project	อาคารทิศตะวันออก โซน ซี	**Beam Code**	B-3B
Engineer	CKJ	**File Name**	Beam
		Date	4 Aug 20

	fc'	=	350	[kg/cm²]
	fy SD	=	4000	[kg/cm²]
	fy SD	=	4000	[kg/cm²]
$M_{-pos.}$	Mu^{+}	=	0	[kg-m]
$M_{-neg.}$	Mu^{-}	=	106706	[kg-m]
$V_{max.}$	Vu	=	46462	[kg]
	DL	=	4170	[kg/m]
	LL	=	1020	[kg/m]
Length	Ln	=	260	[cm]
width	b	=	30	[cm]
depth	t	=	80	[cm]
	d'	=	5	[cm]
siding	d"	=	3.5	[cm]

For Positive Moment :

Upper Steel	DB28
Lower Steel	DB28
Stirrup Steel	DB12

d	=	75	[cm]
a try	=	0.0000	[cm]
As	=	0.000	[cm²]
a	=	**0.0000**	[cm]
ϕ Bend	=	0.90	
ϕ Shea	=	0.85	
k1	=	0.80	
Es	=	2040000	[kg/cm²]
Ec	=	284553	[kg/cm²]
n	=	7	
ρ	=	0.0360	
ρ_{max}	=	0.0270	
As	=	60.708	[cm²]
a	=	27.208	[cm]
Mu	=	134181	[kg-m]
M1	=	0	[kg-m]
As'	=	0.0000	[cm²]
No. of steel	=	**2**	
As	=	12.32	[cm²]
Σ As	=	0.000	[cm²]
No. of steel	=	**2**	
As	=	12.32	[cm²]

Section OK

For Negative Moment :

Upper Steel	DB28
Lower Steel	DB28
Stirrup Steel	DB12

d	=	75	[cm]
a try	=	8.7110	[cm]
As	=	41.957	[cm²]
a	=	**18.8044**	[cm]
ϕ Bend	=	0.90	
ϕ Shea	=	0.85	
k1	=	1.05	
Es	=	2040000	[kg/cm²]
Ec	=	284553	[kg/cm²]
n	=	7	
ρ	=	0.0472	
ρ_{max}	=	0.0354	
As	=	79.680	[cm²]
a	=	35.711	[cm]
Mu	=	163917	[kg-m]
M1	=	0	[kg-m]
As'	=	0.0000	[cm²]
No. of steel	=	**2**	
As	=	12.32	[cm²]
Σ As	=	41.957	[cm²]
No. of steel	=	**7**	
As	=	43.10	[cm²]

Section OK

Stirrup Design

$0.53\,\phi\,(fc')^{0.5}\,bd$	=	20079	[kg]	
L=Ln/2(Vu - ϕ Vc)/Vu	=	82.2	[cm]	
S	=	21.862	[cm]	
Used Stirrup	1	**DB12 @ 0.200**		OK

Check Deflection

Δ all	=	0.72	[cm]		
ρ fy	=	22	<	35	[kg/cm²]
Y'	=	18.1			
I	=	1054688	[cm⁴]		
Ec	=	284116	[kg/cm²]		
Δ	=	0.01	[cm] <	Δ all	OK
Δ Time	=	0.01	<	Δ all	OK

KINGDOM OF THAILAND
CHOKCHAI KHATKHAJORN
โชคชัย ขัดขจร
สย. 4522
REGISTERED PROFESSIONAL ENGINEER

DYNAMIC ENGINEERING CONSULTANT CO., LTD.

RC-I EXCEL — **Ultimate Stress Design method in accordance with ACI 318-89**

Design Reinforced Concrete Beam

Project	อาคารทิศตะวันออก โซน ซี	**Beam Code**	B-3B
Engineer	CKJ	**File Name**	Beam
		Date	4 Aug 20

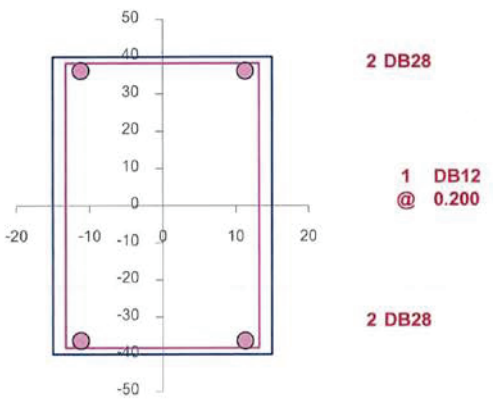

Positive Section

B-3B (30 X 80)

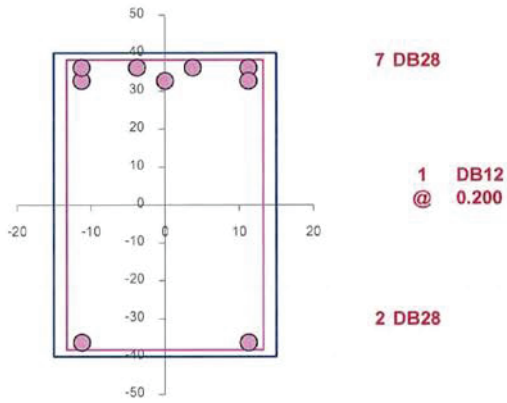

Negative Section

B-3B (30 X 80)

KINGDOM OF THAILAND
CHOKCHAI KHATKHAJORN
โชคชัย ขัดขจร
สย. 4522
REGISTERED PROFESSIONAL ENGINEER

DYNAMIC ENGINEERING CONSULTANT CO., LTD.

Design Reinforced Concrete Beam

(Ultimate Stress Design method in accordance with ACI 318-89)

Job No.	193018	Beam No.	B-3C
Rev.	1	Project :	อาคารทิศตะวันออก
Initial	CKJ		
Date	13-Aug-20		
File	Beam B		

	fc'	=	350	[kg/cm^2]
	fy SD	=	4000	[kg/cm^2]
	fy SR	=	2400	[kg/cm^2]
$M_{-pos.}$	Mu^+	=	25000	[kg-m]
$M_{-neg.}$	Mu^-	=	33127	[kg-m]
$V_{max.}$	Vu	=	31295	[kg]
	DL	=	4675	[kg/m]
	LL	=	1580	[kg/m]
Length	Ln	=	120	[cm]
width	b	=	30	[cm]
depth	t	=	70	[cm]
	d'	=	5	[cm]
siding	d''	=	3.5	[cm]

For Positive Moment :

Upper Steel	DB 20
Lower Steel	DB 20
Stirrup Steel	RB 9

	d	=	65	[cm]
	a try	=	4.9789	[cm]
	As	=	11.109	[cm^2]
	a	=	**4.9789**	[cm]
	ϕ Bend	=	0.90	
	ϕ Shea	=	0.85	
	k1	=	0.80	
	Es	=	2040000	[kg/cm^2]
	Ec	=	284553	[kg/cm^2]
	n	=	7	
	ρ	=	0.0360	
	ρ_{max}	=	0.0270	
	As	=	52.614	[cm^2]
	a	=	23.580	[cm]
	Mu	=	100784	[kg-m]
	M1	=	0	[kg-m]
	As'	=	0.0000	[cm^2]
No. of steel		=	**2**	
	As	=	6.28	[cm^2]
	Σ As	=	11.109	[cm^2]
No. of steel		=	**4**	
	As	=	12.57	[cm^2]

Section OK

Stirrup Design

$0.53\,\phi\,(fc')^{0.5}\,bd$	=	17402	[kg]	
L=Ln/2(Vu - ϕ Vc)/Vu	=	31.6	[cm]	
S	=	12.143	[cm]	
Used Stirrup	2	**RB 9 @ 0.120**		**OK**

For Negative Moment :

Upper Steel	DB 20
Lower Steel	DB 20
Stirrup Steel	RB 9

	d	=	65	[cm]
	a try	=	8.7110	[cm]
	As	=	14.721	[cm^2]
	a	=	**4.9789**	[cm]
	ϕ Bend	=	0.90	
	ϕ Shea	=	0.85	
	k1	=	1.05	
	Es	=	2040000	[kg/cm^2]
	Ec	=	284553	[kg/cm^2]
	n	=	7	
	ρ	=	0.0472	
	ρ_{max}	=	0.0354	
	As	=	69.056	[cm^2]
	a	=	30.949	[cm]
	Mu	=	123120	[kg-m]
	M1	=	0	[kg-m]
	As'	=	0.0000	[cm^2]
No. of steel		=	**2**	
	As	=	6.28	[cm^2]
	Σ As	=	14.721	[cm^2]
No. of steel		=	**5**	
	As	=	15.71	[cm^2]

Section OK

Check Deflection

Δ all	=	0.33	[cm]		
ρ fy	=	26	<	35	[kg/cm^2]
Y'	=	16.8			
I	=	686563	[cm^4]		
Ec	=	284116	[kg/cm^2]		
Δ	=	0.00 [cm]	<	Δ all	**OK**
Δ Time	=	0	<	Δ all	**OK**

KINGDOM OF THAILAND
CHOKCHAI KHATKHAJORN
โชคชัย ขัตขจร
สย. 4522
REGISTERED PROFESSIONAL ENGINEER

DYNAMIC ENGINEERING CONSULTANT CO., LTD.		Job No.	193018
Design Reinforced Concrete Beam		Rev.	1
(Ultimate Stress Design method in accordance with ACI 318-89)		Initial	CKJ
Beam No.	B-3C	Date	13-Aug-20
Project :	อาคารทิศตะวันออก	File	Beam B

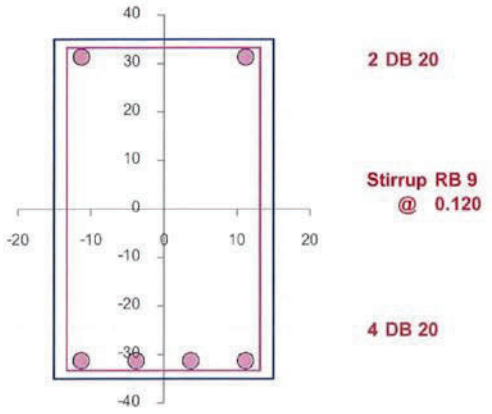

Positive Section

B-3C (30 X 70)

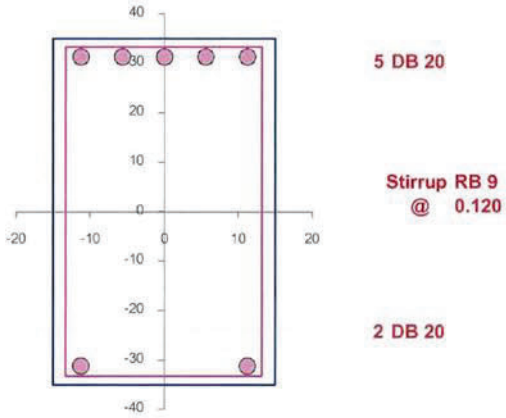

Negative Section

B-3C (30 X 70)

KINGDOM OF THAILAND
CHOKCHAI KHATKHAJORN
โชคชัย ขัดขจร
สย. 4522
REGISTERED PROFESSIONAL ENGINEER

DYNAMIC ENGINEERING CONSULTANT CO., LTD.

Design Reinforced Concrete Beam

(Ultimate Stress Design method in accordance with ACI 318-89)

Job No.	193018	Beam No.	B-4
Rev.	1	Date	13-Aug-20
Initial	CKJ	Project :	อาคารทิศตะวันออก
		File	Beam B

	fc'	=	350	[kg/cm^2]
	fy SD	=	4000	[kg/cm^2]
	fy SR	=	2400	[kg/cm^2]
$M_{-pos.}$	Mu$^+$	=	8840	[kg-m]
$M_{-neg.}$	Mu$^-$	=	0	[kg-m]
$V_{max.}$	Vu	=	9264	[kg]
	DL	=	1850	[kg/m]
	LL	=	1350	[kg/m]
Length	Ln	=	340	[cm]
width	b	=	25	[cm]
depth	t	=	50	[cm]
	d'	=	3.5	[cm]
siding	d''	=	3.5	[cm]

For Positive Moment :

Upper Steel	DB 16
Lower Steel	DB 16
Stirrup Steel	RB 9

	d	=	46.5 [cm]
	a try	=	2.9323 [cm]
	As	=	5.453 [cm^2]
	a	=	**2.9325** [cm]
	ϕ Bend	=	0.90
	ϕ Shea	=	0.85
	k1	=	0.80
	Es	=	2040000 [kg/cm^2]
	Ec	=	284553 [kg/cm^2]
	n	=	7
	ρ	=	0.0360
	ρ_{max}	=	0.0270
	As	=	31.366 [cm^2]
	a	=	16.869 [cm]
	Mu	=	42982 [kg-m]
	M1	=	0 [kg-m]
	As'	=	0.0000 [cm^2]
	No. of steel	=	**2**
	As	=	4.02 [cm^2]
	Σ As	=	5.453 [cm^2]
	No. of steel	=	**3**
	As	=	6.03 [cm^2]

Section OK

Stirrup Design

$0.53\ \phi\ (fc')^{0.5}\ bd$	=	10374	[kg]
L=Ln/2(Vu - ϕ Vc)/Vu	=	8.2	[cm]
S	=	-108.736	[cm]
Used Stirrup		RB 9 @ #N/A	#N/A

For Negative Moment :

Upper Steel	DB 16
Lower Steel	DB 16
Stirrup Steel	RB 9

	d	=	46.5 [cm]
	a try	=	8.7110 [cm]
	As	=	0.000 [cm^2]
	a	=	**2.9325** [cm]
	ϕ Bend	=	0.90
	ϕ Shea	=	0.85
	k1	=	1.05
	Es	=	2040000 [kg/cm^2]
	Ec	=	284553 [kg/cm^2]
	n	=	7
	ρ	=	0.0472
	ρ_{max}	=	0.0354
	As	=	41.168 [cm^2]
	a	=	22.141 [cm]
	Mu	=	52508 [kg-m]
	M1	=	0 [kg-m]
	As'	=	0.0000 [cm^2]
	No. of steel	=	**2**
	As	=	4.02 [cm^2]
	Σ As	=	0.000 [cm^2]
	No. of steel	=	**2**
	As	=	4.02 [cm^2]

Section OK

Check Deflection

Δ all	=	0.94 [cm]			
ρ fy	=	21	<	35	[kg/cm^2]
Y'	=	11			
I	=	209468	[cm^4]		
Ec	=	284116	[kg/cm^2]		
Δ	=	0.09 [cm]	<	Δ all	OK
Δ Time	=	0.03	<	Δ all	OK

KINGDOM OF THAILAND
CHOKCHAI KHATKHAJORN
โชคชัย ขัดขจร
สย. 4522
REGISTERED PROFESSIONAL ENGINEER

DYNAMIC ENGINEERING CONSULTANT CO., LTD.		Job No.	193018
Design Reinforced Concrete Beam		Rev.	1
(Ultimate Stress Design method in accordance with ACI 318-89)		Initial	CKJ
Beam No.	B-4	Date	13-Aug-20
Project :	อาคารทิศตะวันออก	File	Beam B

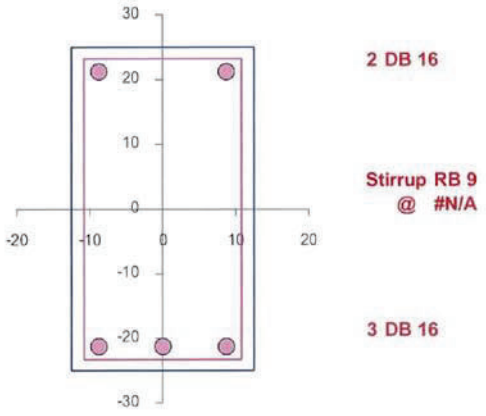

Positive Section

B-4 (25 X 50)

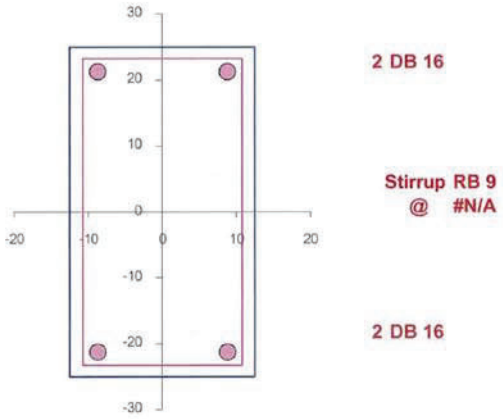

Negative Section

B-4 (25 X 50)

KINGDOM OF THAILAND
CHOKCHAI KHATKHAJORN
โชคชัย ขัดขจร
สย. 4522
REGISTERED PROFESSIONAL ENGINEER

DYNAMIC ENGINEERING CONSULTANT CO., LTD.		Job No.	193018
Design Reinforced Concrete Beam		Rev.	1
(Ultimate Stress Design method in accordance with ACI 318-89)		Initial	CKJ
Beam No.	B-5	Date	13-Aug-20
Project :	อาคารทิศตะวันออก	File	Beam B

	fc'	=	350	[kg/cm^2]
	fy SD	=	4000	[kg/cm^2]
	fy SR	=	2400	[kg/cm^2]
$M_{+pos.}$	Mu^+	=	20652	[kg-m]
$M_{-neg.}$	Mu^-	=	0	[kg-m]
$V_{max.}$	Vu	=	16709	[kg]
	DL	=	2855	[kg/m]
	LL	=	1275	[kg/m]
Length	Ln	=	500	[cm]
width	b	=	25	[cm]
depth	t	=	50	[cm]
	d'	=	5	[cm]
siding	d"	=	3.5	[cm]

For Positive Moment :

Upper Steel	DB 25
Lower Steel	DB 25
Stirrup Steel	RB 9

d	=	45	[cm]
a try	=	7.4773	[cm]
As	=	13.903	[cm^2]
a	=	**7.4774**	[cm]
ϕ Bend	=	0.90	
ϕ Shea	=	0.85	
k1	=	0.80	
Es	=	2040000	[kg/cm^2]
Ec	=	284553	[kg/cm^2]
n	=	7	
ρ	=	0.0360	
ρ_{max}	=	0.0270	
As	=	30.354	[cm^2]
a	=	16.325	[cm]
Mu	=	40254	[kg-m]
M1	=	0	[kg-m]
As'	=	0.0000	[cm^2]
No. of steel	=	**2**	
As	=	9.82	[cm^2]
Σ As	=	13.903	[cm^2]
No. of steel	=	**3**	
As	=	14.73	[cm^2]

Section OK

Stirrup Design

$0.53\ \phi\ (fc')^{0.5}\ bd$	=	10039	[kg]
L=Ln/2(Vu - ϕ Vc)/Vu	=	122.3	[cm]
S	=	17.512	[cm]
Used Stirrup		**RB 9 @ 0.175**	**OK**

For Negative Moment :

Upper Steel	DB 25
Lower Steel	DB 25
Stirrup Steel	RB 9

d	=	45	[cm]
a try	=	8.7110	[cm]
As	=	0.000	[cm^2]
a	=	**7.4774**	[cm]
ϕ Bend	=	0.90	
ϕ Shea	=	0.85	
k1	=	1.05	
Es	=	2040000	[kg/cm^2]
Ec	=	284553	[kg/cm^2]
n	=	7	
ρ	=	0.0472	
ρ_{max}	=	0.0354	
As	=	39.840	[cm^2]
a	=	21.426	[cm]
Mu	=	49175	[kg-m]
M1	=	0	[kg-m]
As'	=	0.0000	[cm^2]
No. of steel	=	**2**	
As	=	9.82	[cm^2]
Σ As	=	0.000	[cm^2]
No. of steel	=	**2**	
As	=	9.82	[cm^2]

Section OK

Check Deflection

Δ all	=	1.39	[cm]		
ρ fy	=	52	>	35	[kg/cm^2]
Y'	=	15.6			
I	=	120738	[cm^4]		
Ec	=	284116	[kg/cm^2]		
Δ	=	0.98	[cm] <	Δ all	OK
Δ Time	=	0.4	<	Δ all	OK

KINGDOM OF THAILAND
CHOKCHAI KHATKHAJORN
โชคชัย ขัตขจร
สย. 4522
REGISTERED PROFESSIONAL ENGINEER

DYNAMIC ENGINEERING CONSULTANT CO., LTD.	Job No.	193018
Design Reinforced Concrete Beam	Rev.	1
(Ultimate Stress Design method in accordance with ACI 318-89)	Initial	CKJ
Beam No. B-5	Date	13-Aug-20
Project : อาคารทิศตะวันออก	File	Beam B

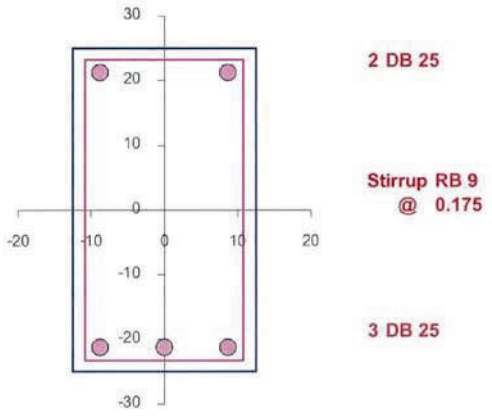

Positive Section
B-5 (25 X 50)

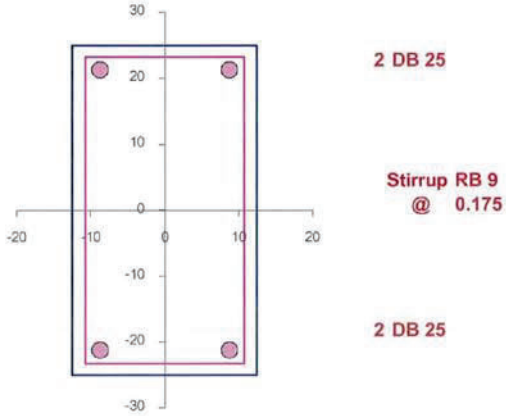

Negative Section
B-5 (25 X 50)

KINGDOM OF THAILAND
CHOKCHAI KHATKHAJORN
โชคชัย ขัดขจร
สย. 4522
REGISTERED PROFESSIONAL ENGINEER

DYNAMIC ENGINEERING CONSULTANT CO., LTD.	Job No.	193018
Design Reinforced Concrete Beam	Rev.	1
(Ultimate Stress Design method in accordance with ACI 318-89)	Initial	CKJ
Beam No. B-6	Date	13-Aug-20
Project : อาคารทิศตะวันออก	File	Beam B

	fc'	=	350	[kg/cm^2]
	fy SD	=	4000	[kg/cm^2]
	fy SR	=	2400	[kg/cm^2]
$M_{-pos.}$	Mu^+	=	20939	[kg-m]
$M_{-neg.}$	Mu^-	=	12000	[kg-m]
$V_{max.}$	Vu	=	16175	[kg]
	DL	=	2855	[kg/m]
	LL	=	1275	[kg/m]
Length	Ln	=	550	[cm]
width	b	=	25	[cm]
depth	t	=	60	[cm]
	d'	=	3.5	[cm]
siding	d''	=	3.5	[cm]

For Positive Moment :

Upper Steel	DB 20
Lower Steel	DB 20
Stirrup Steel	RB 9

	d	=	56.5 [cm]
	a try	=	5.8377 [cm]
	As	=	10.855 [cm^2]
	a	=	**5.8381** [cm]
	ϕ Bend	=	0.90
	ϕ Shea	=	0.85
	k1	=	0.80
	Es	=	2040000 [kg/cm^2]
	Ec	=	284553 [kg/cm^2]
	n	=	7
	ρ	=	0.0360
	ρ_{max}	=	0.0270
	As	=	38.111 [cm^2]
	a	=	20.497 [cm]
	Mu	=	63457 [kg-m]
	M1	=	0 [kg-m]
	As'	=	0.0000 [cm^2]
No. of steel		=	**2**
	As	=	6.28 [cm^2]
	Σ As	=	10.855 [cm^2]
No. of steel		=	**4**
	As	=	12.57 [cm^2]

Section OK

For Negative Moment :

Upper Steel	DB 20
Lower Steel	DB 20
Stirrup Steel	RB 9

	d	=	56.5 [cm]
	a try	=	8.7110 [cm]
	As	=	6.221 [cm^2]
	a	=	**5.8381** [cm]
	ϕ Bend	=	0.90
	ϕ Shea	=	0.85
	k1	=	1.05
	Es	=	2040000 [kg/cm^2]
	Ec	=	284553 [kg/cm^2]
	n	=	7
	ρ	=	0.0472
	ρ_{max}	=	0.0354
	As	=	50.021 [cm^2]
	a	=	26.902 [cm]
	Mu	=	77521 [kg-m]
	M1	=	0 [kg-m]
	As'	=	0.0000 [cm^2]
No. of steel		=	**2**
	As	=	6.28 [cm^2]
	Σ As	=	6.221 [cm^2]
No. of steel		=	**2**
	As	=	6.28 [cm^2]

Section OK

Stirrup Design

$0.53\,\phi\,(fc')^{0.5}\,bd$	=	12605	[kg]
L=Ln/2(Vu - ϕ Vc)/Vu	=	92.8	[cm]
S	=	28.250	[cm]
Used Stirrup		**RB 9 @ 0.250**	**OK**

Check Deflection

Δ all	=	1.53 [cm]			
ρ fy	=	36	>	35	[kg/cm^2]
Y'	=	16.7			
I	=	178151	[cm^4]		
Ec	=	284116	[kg/cm^2]		
Δ	=	0.97 [cm]	<	Δ all	**OK**
Δ Time	=	0.63	<	Δ all	**OK**

KINGDOM OF THAILAND
CHOKCHAI KHATKHAJORN
โชคชัย ขัดขจร
สบ. 4522
REGISTERED PROFESSIONAL ENGINEER

DYNAMIC ENGINEERING CONSULTANT CO., LTD.		Job No.	193018
Design Reinforced Concrete Beam		Rev.	1
(Ultimate Stress Design method in accordance with ACI 318-89)		Initial	CKJ
Beam No.	B-6	Date	13-Aug-20
Project :	อาคารทิศตะวันออก	File	Beam B

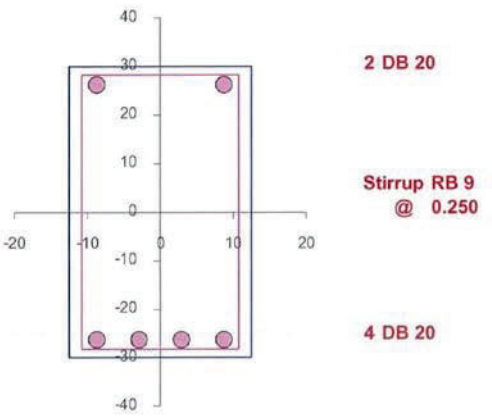

Positive Section

B-6 (25 X 60)

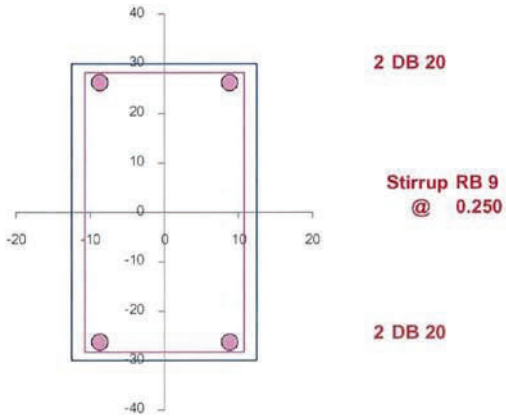

Negative Section

B-6 (25 X 60)

KINGDOM OF THAILAND
CHOKCHAI KHATKHAJORN
โชคชัย ขัดขจร
สย. 4522
REGISTERED PROFESSIONAL ENGINEER

DYNAMIC ENGINEERING CONSULTANT CO., LTD.

Design Reinforced Concrete Beam

(Ultimate Stress Design method in accordance with ACI 318-89)

Job No.	193018	Beam No.	B-7
Rev.	1	Project :	อาคารทิศตะวันออก
Initial	CKJ		
Date	13-Aug-20		
File	Beam B		

	fc'	=	350	[kg/cm^2]
	fy SD	=	4000	[kg/cm^2]
	fy SR	=	2400	[kg/cm^2]
$M_{-pos.}$	Mu^+	=	30770	[kg-m]
$M_{-neg.}$	Mu^-	=	12000	[kg-m]
$V_{max.}$	Vu	=	18435	[kg]
	DL	=	2275	[kg/m]
	LL	=	775	[kg/m]
Length	Ln	=	540	[cm]
width	b	=	25	[cm]
depth	t	=	60	[cm]
	d'	=	3.5	[cm]
siding	d"	=	3.5	[cm]

For Positive Moment :

Upper Steel	DB 25
Lower Steel	DB 25
Stirrup Steel	RB 9

	d	=	56.5	[cm]
	a try	=	8.8252	[cm]
	As	=	16.409	[cm^2]
	a	=	**8.8252**	[cm]
	ϕ Bend	=	0.90	
	ϕ Shea	=	0.85	
	k1	=	0.80	
	Es	=	2040000	[kg/cm^2]
	Ec	=	284553	[kg/cm^2]
	n	=	7	
	ρ	=	0.0360	
	ρ_{max}	=	0.0270	
	As	=	38.111	[cm^2]
	a	=	20.497	[cm]
	Mu	=	63457	[kg-m]
	M1	=	0	[kg-m]
	As'	=	0.0000	[cm^2]
No. of steel		=	**2**	
	As	=	9.82	[cm^2]
	Σ As	=	16.409	[cm^2]
No. of steel		=	**4**	
	As	=	19.63	[cm^2]

Section OK

For Negative Moment :

Upper Steel	DB 25
Lower Steel	DB 25
Stirrup Steel	RB 9

	d	=	56.5	[cm]
	a try	=	8.7110	[cm]
	As	=	6.400	[cm^2]
	a	=	**8.8252**	[cm]
	ϕ Bend	=	0.90	
	ϕ Shea	=	0.85	
	k1	=	1.05	
	Es	=	2040000	[kg/cm^2]
	Ec	=	284553	[kg/cm^2]
	n	=	7	
	ρ	=	0.0472	
	ρ_{max}	=	0.0354	
	As	=	50.021	[cm^2]
	a	=	26.902	[cm]
	Mu	=	77521	[kg-m]
	M1	=	0	[kg-m]
	As'	=	0.0000	[cm^2]
No. of steel		=	**2**	
	As	=	9.82	[cm^2]
	Σ As	=	6.400	[cm^2]
No. of steel		=	**2**	
	As	=	9.82	[cm^2]

Section OK

Stirrup Design

$0.53\ \phi\ (fc')^{0.5}\ bd$	=	12605	[kg]	
L=Ln/2(Vu - ϕ Vc)/Vu	=	113.1	[cm]	
S	=	25.154	[cm]	
Used Stirrup		RB 9 @ 0.250		OK

Check Deflection

Δ all	=	1.50	[cm]		
ρ fy	=	56	>	35	[kg/cm^2]
Y'	=	20			
I	=	249777	[cm^4]		
Ec	=	284116	[kg/cm^2]		
Δ	=	0.48	[cm] <	Δ all	OK
Δ Time	=	0.32	<	Δ all	OK

KINGDOM OF THAILAND
CHOKCHAI KHATKHAJORN
โชคชัย ขัดขจร
สย. 4522
REGISTERED PROFESSIONAL ENGINEER

DYNAMIC ENGINEERING CONSULTANT CO., LTD.		Job No.	193018
Design Reinforced Concrete Beam		Rev.	1
(Ultimate Stress Design method in accordance with ACI 318-89)		Initial	CKJ
Beam No.	B-7	Date	13-Aug-20
Project :	อาคารทิศตะวันออก	File	Beam B

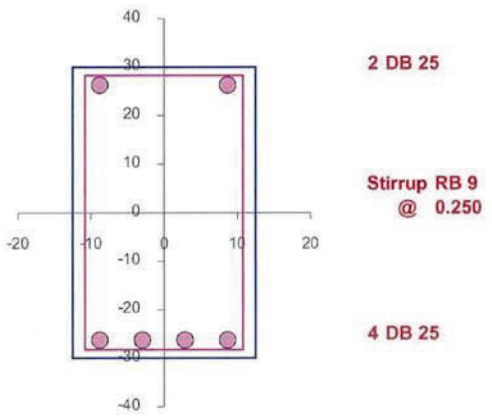

Positive Section

B-7 (25 X 60)

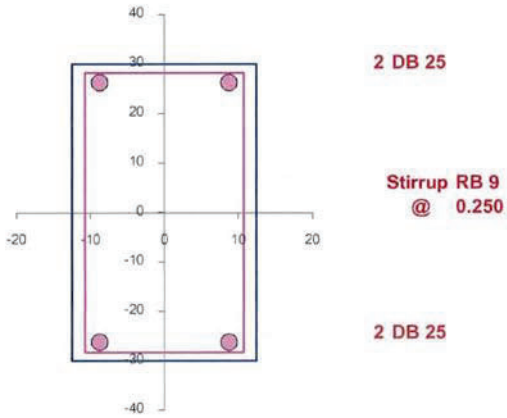

Negative Section

B-7 (25 X 60)

KINGDOM OF THAILAND
CHOKCHAI KHATKHAJORN
โชคชัย ขัดขจร
สย. 4522
REGISTERED PROFESSIONAL ENGINEER

DYNAMIC ENGINEERING CONSULTANT CO., LTD.	Job No.	193018
Design Reinforced Concrete Beam	Rev.	1
(Ultimate Stress Design method in accordance with ACI 318-89)	Initial	CKJ
Beam No. B-8	Date	13-Aug-20
Project : อาคารทิศตะวันออก	File	Beam B

	fc'	=	350	[kg/cm^2]
	fy SD	=	4000	[kg/cm^2]
	fy SR	=	2400	[kg/cm^2]
$M_{-pos.}$	Mu^+	=	53986	[kg-m]
$M_{-neg.}$	Mu^-	=	53986	[kg-m]
$V_{max.}$	Vu	=	31788	[kg]
	DL	=	3240	[kg/m]
	LL	=	1380	[kg/m]
Length	Ln	=	730	[cm]
width	b	=	25	[cm]
depth	t	=	80	[cm]
	d'	=	5	[cm]
siding	d''	=	3.5	[cm]

For Positive Moment :

Upper Steel: DB 25
Lower Steel: DB 25
Stirrup Steel: RB 9

d	=	75	[cm]
a try	=	11.6598	[cm]
As	=	21.680	[cm^2]
a	=	**11.6599**	[cm]
ϕ Bend	=	0.90	
ϕ Shea	=	0.85	
k1	=	0.80	
Es	=	2040000	[kg/cm^2]
Ec	=	284553	[kg/cm^2]
n	=	7	
ρ	=	0.0360	
ρ_{max}	=	0.0270	
As	=	50.590	[cm^2]
a	=	27.208	[cm]
Mu	=	111817	[kg-m]
M1	=	0	[kg-m]
As'	=	0.0000	[cm^2]
No. of steel	=	**2**	
As	=	9.82	[cm^2]
Σ As	=	21.680	[cm^2]
No. of steel	=	**5**	
As	=	24.54	[cm^2]

Section OK

For Negative Moment :

Upper Steel: DB 25
Lower Steel: DB 25
Stirrup Steel: RB 9

d	=	75	[cm]
a try	=	8.7110	[cm]
As	=	21.680	[cm^2]
a	=	**11.6599**	[cm]
ϕ Bend	=	0.90	
ϕ Shea	=	0.85	
k1	=	1.05	
Es	=	2040000	[kg/cm^2]
Ec	=	284553	[kg/cm^2]
n	=	7	
ρ	=	0.0472	
ρ_{max}	=	0.0354	
As	=	66.400	[cm^2]
a	=	35.711	[cm]
Mu	=	136598	[kg-m]
M1	=	0	[kg-m]
As'	=	0.0000	[cm^2]
No. of steel	=	**2**	
As	=	9.82	[cm^2]
Σ As	=	21.680	[cm^2]
No. of steel	=	**5**	
As	=	24.54	[cm^2]

Section OK

Stirrup Design

$0.53\,\phi\,(fc')^{0.5}\,bd$	=		16732	[kg]
L=Ln/2(Vu - ϕ Vc)/Vu	=		201.7	[cm]
S	=		12.930	[cm]
Used Stirrup	2	**RB 9**	**@ 0.125**	**OK**

Check Deflection

Δ all	=	2.03	[cm]		
ρ fy	=	52	>	35	[kg/cm^2]
Y'	=	26			
I	=	558971	[cm^4]		
Ec	=	284116	[kg/cm^2]		
Δ	=	1.08	[cm] <	Δ all	**OK**
Δ Time	=	1.77	<	Δ all	**OK**

KINGDOM OF THAILAND
CHOKCHAI KHATKHAJORN
โชคชัย ขัดขจร
สย. 4522
REGISTERED PROFESSIONAL ENGINEER

DYNAMIC ENGINEERING CONSULTANT CO., LTD.		Job No.	193018
Design Reinforced Concrete Beam		Rev.	1
(Ultimate Stress Design method in accordance with ACI 318-89)		Initial	CKJ
Beam No.	B-8	Date	13-Aug-20
Project :	อาคารทิศตะวันออก	File	Beam B

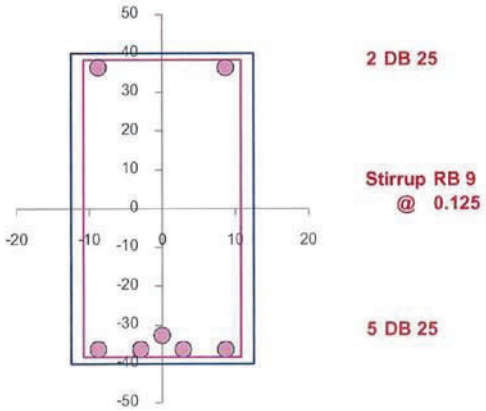

Positive Section

B-8 (25 X 80)

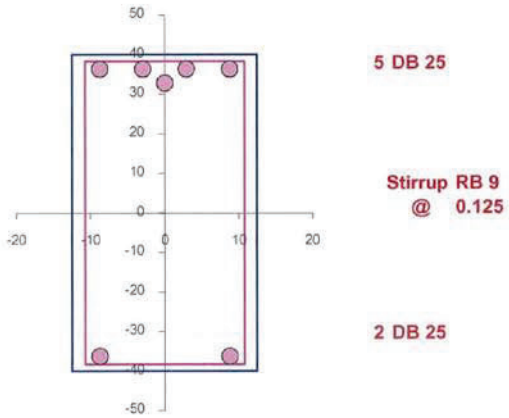

Negative Section

B-8 (25 X 80)

KINGDOM OF THAILAND
CHOKCHAI KHATKHAJORN
โชคชัย ขัดขจร
สย. 4522
REGISTERED PROFESSIONAL ENGINEER

DYNAMIC ENGINEERING CONSULTANT CO., LTD.

RC-I EXCEL — **Ultimate Stress Design method in accordance with ACI 318-89**

Design Reinforced Concrete Beam

Project	อาคารทิศตะวันออก โซน ซี	**Beam Code**	B-9
Engineer	CKJ	**File Name**	Beam
		Date	13 Aug 20

	fc'	=	350	[kg/cm²]
	fy SD	=	4000	[kg/cm²]
	fy SD	=	4000	[kg/cm²]
$M_{+pos.}$	Mu^+	=	90108	[kg-m]
$M_{-neg.}$	Mu^-	=	40050	[kg-m]
$V_{max.}$	Vu	=	43981	[kg]
	DL	=	4820	[kg/m]
	LL	=	1530	[kg/m]
Length	Ln	=	760	[cm]
width	b	=	30	[cm]
depth	t	=	80	[cm]
	d'	=	5	[cm]
siding	d"	=	3.5	[cm]

For Positive Moment :

Upper Steel	DB28
Lower Steel	DB28
Stirrup Steel	DB12

	d	=	75 [cm]
	a try	=	16.8501 [cm]
	As	=	37.597 [cm²]
	a	=	**16.8501** [cm]
	ϕ Bend	=	0.90
	ϕ Shea	=	0.85
	k1	=	0.80
	Es	=	2040000 [kg/cm²]
	Ec	=	284553 [kg/cm²]
	n	=	7
	ρ	=	0.0360
	ρ_{max}	=	0.0270
	As	=	60.708 [cm²]
	a	=	27.208 [cm]
	Mu	=	134181 [kg-m]
	M1	=	0 [kg-m]
	As'	=	0.0000 [cm²]
No. of steel		=	**2**
	As	=	12.32 [cm²]
	Σ As	=	37.597 [cm²]
No. of steel		=	**7**
	As	=	43.10 [cm²]

Section OK

For Negative Moment :

Upper Steel	DB28
Lower Steel	DB28
Stirrup Steel	DB12

	d	=	75 [cm]
	a try	=	8.7110 [cm]
	As	=	15.748 [cm²]
	a	=	**7.0579** [cm]
	ϕ Bend	=	0.90
	ϕ Shea	=	0.85
	k1	=	1.05
	Es	=	2040000 [kg/cm²]
	Ec	=	284553 [kg/cm²]
	n	=	7
	ρ	=	0.0472
	ρ_{max}	=	0.0354
	As	=	79.680 [cm²]
	a	=	35.711 [cm]
	Mu	=	163917 [kg-m]
	M1	=	0 [kg-m]
	As'	=	0.0000 [cm²]
No. of steel		=	**2**
	As	=	12.32 [cm²]
	Σ As	=	15.748 [cm²]
No. of steel		=	**3**
	As	=	18.47 [cm²]

Section OK

Stirrup Design

$0.53\,\phi\,(fc')^{0.5}\,bd$	=	20079	[kg]	
L=Ln/2(Vu - ϕ Vc)/Vu	=	232.5	[cm]	
S	=	37.500	[cm]	
Used Stirrup	2	DB12 @ 0.360		OK

Check Deflection

Δ all	=	2.11 [cm]		
ρ fy	=	77	> 35	[kg/cm²]
Y'	=	30.1		
I	=	880975	[cm⁴]	
Ec	=	284116	[kg/cm²]	
Δ	=	1.10 [cm]	< Δ all	OK
Δ Time	=	1.89	< Δ all	OK

KINGDOM OF THAILAND
CHOKCHAI KHATKHAJORN
โชคชัย ขัดขจร
สย. 4522
REGISTERED PROFESSIONAL ENGINEER

DYNAMIC ENGINEERING CONSULTANT CO., LTD.

RC-I EXCEL — **Ultimate Stress Design method in accordance with ACI 318-89**

Design Reinforced Concrete Beam

Project	อาคารทิศตะวันออก โซน ซี	Beam Code	B-9
Engineer	CKJ	File Name	Beam
		Date	13 Aug 20

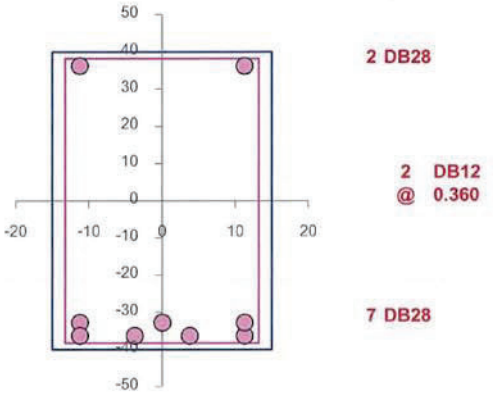

Positive Section
B-9 (30 X 80)

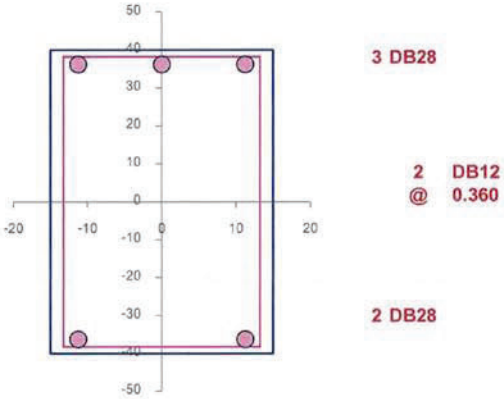

Negative Section
B-9 (30 X 80)

KINGDOM OF THAILAND
CHOKCHAI KHATKHAJORN
โชคชัย ขัดขจร
สย. 4522
REGISTERED PROFESSIONAL ENGINEER

DYNAMIC ENGINEERING CONSULTANT CO., LTD.

RC-I EXCEL — **Ultimate Stress Design method in accordance with ACI 318-89**

Design Reinforced Concrete Beam

Project	อาคารทิศตะวันออก โซน ซี	**Beam Code**	B-9A
Engineer	CKJ	**File Name**	Beam
		Date	13 Aug 20

	fc'	=	350	[kg/cm^2]
	fy SD	=	4000	[kg/cm^2]
	fy SD	=	4000	[kg/cm^2]
$M_{+pos.}$	Mu$^+$	=	81097	[kg-m]
$M_{-neg.}$	Mu$^-$	=	81097	[kg-m]
$V_{max.}$	Vu	=	63718	[kg]
	DL	=	4150	[kg/m]
	LL	=	1650	[kg/m]
Length	Ln	=	760	[cm]
width	b	=	30	[cm]
depth	t	=	80	[cm]
	d'	=	5	[cm]
siding	d"	=	3.5	[cm]

For Positive Moment :

Upper Steel	DB28
Lower Steel	DB28
Stirrup Steel	DB12

	d	=	75	[cm]
	a try	=	14.9518	[cm]
	As	=	33.361	[cm^2]
	a	=	**14.9519**	[cm]
	ϕ Bend	=	0.90	
	ϕ Shea	=	0.85	
	k1	=	0.80	
	Es	=	2040000	[kg/cm^2]
	Ec	=	284553	[kg/cm^2]
	n	=	7	
	ρ	=	0.0360	
	ρ_{max}	=	0.0270	
	As	=	60.708	[cm^2]
	a	=	27.208	[cm]
	Mu	=	134181	[kg-m]
	M1	=	0	[kg-m]
	As'	=	0.0000	[cm^2]
No. of steel		=	**2**	
	As	=	12.32	[cm^2]
	Σ As	=	33.361	[cm^2]
No. of steel		=	**6**	
	As	=	36.95	[cm^2]

Section OK

Stirrup Design

0.53 ϕ (fc')$^{0.5}$ bd	=	20079	[kg]	
L=Ln/2(Vu - ϕ Vc)/Vu	=	278.2	[cm]	
S	=	18.750	[cm]	
Used Stirrup	2	DB12 @ 0.175		OK

For Negative Moment :

Upper Steel	DB28
Lower Steel	DB28
Stirrup Steel	DB12

	d	=	75	[cm]
	a try	=	8.7110	[cm]
	As	=	31.888	[cm^2]
	a	=	**14.2914**	[cm]
	ϕ Bend	=	0.90	
	ϕ Shea	=	0.85	
	k1	=	1.05	
	Es	=	2040000	[kg/cm^2]
	Ec	=	284553	[kg/cm^2]
	n	=	7	
	ρ	=	0.0472	
	ρ_{max}	=	0.0354	
	As	=	79.680	[cm^2]
	a	=	35.711	[cm]
	Mu	=	163917	[kg-m]
	M1	=	0	[kg-m]
	As'	=	0.0000	[cm^2]
No. of steel		=	**2**	
	As	=	12.32	[cm^2]
	Σ As	=	31.888	[cm^2]
No. of steel		=	**6**	
	As	=	36.95	[cm^2]

Section OK

Check Deflection

Δ all	=	2.11	[cm]		
ρ fy	=	66	>	35	[kg/cm^2]
Y'	=	28.4			
I	=	790661	[cm^4]		
Ec	=	284116	[kg/cm^2]		
Δ	=	1.12	[cm] <	Δ all	OK
Δ Time	=	1.86	<	Δ all	OK

KINGDOM OF THAILAND
CHOKCHAI KHATKHAJORN
โชคชัย ขัดขจร
สย. 4522
REGISTERED PROFESSIONAL ENGINEER

DYNAMIC ENGINEERING CONSULTANT CO., LTD.

RC-I EXCEL — **Ultimate Stress Design method in accordance with ACI 318-89**

Design Reinforced Concrete Beam

Project	อาคารทิศตะวันออก โซน ซี	Beam Code	B-9A
Engineer	CKJ	File Name	Beam
		Date	13 Aug 20

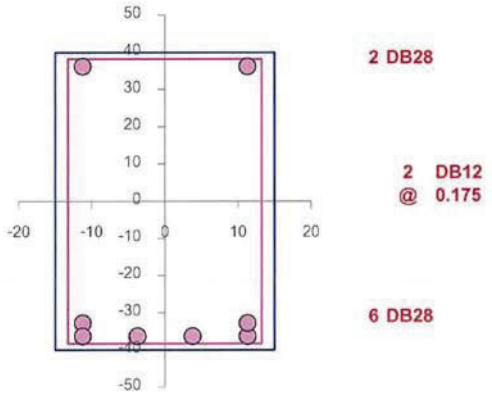

Positive Section
B-9A (30 X 80)

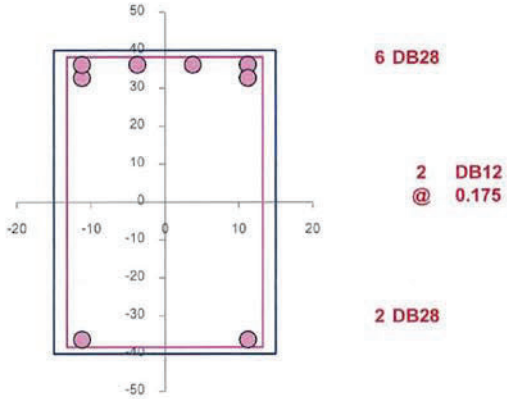

Negative Section
B-9A (30 X 80)

KINGDOM OF THAILAND
CHOKCHAI KHATKHAJORN
โชคชัย ขัดขจร
สย. 4522
REGISTERED PROFESSIONAL ENGINEER

DYNAMIC ENGINEERING CONSULTANT CO., LTD.

RC-I EXCEL — **Ultimate Stress Design method in accordance with ACI 318-89**

Design Reinforced Concrete Beam

Project	อาคารทิศตะวันออก โซน ซี	**Beam Code**	B-10
Engineer	CKJ	**File Name**	Beam
		Date	19 Jun 20

	fc'	=	350	[kg/cm²]
	fy SD	=	4000	[kg/cm²]
	fy SD	=	4000	[kg/cm²]
$M_{+pos.}$	Mu^+	=	158697	[kg-m]
$M_{-neg.}$	Mu^-	=	79348	[kg-m]
$V_{max.}$	Vu	=	50697	[kg]
	DL	=	2440	[kg/m]
	LL	=	660	[kg/m]
Length	Ln	=	900	[cm]
width	b	=	30	[cm]
depth	t	=	80	[cm]
	d'	=	5	[cm]
siding	d"	=	3.5	[cm]

For Positive Moment :

Upper Steel: DB28
Lower Steel: DB28
Stirrup Steel: DB12

d	=	75	[cm]
a try	=	0.0000	[cm]
As	=	0.000	[cm²]
a	=	**0.0000**	[cm]
ϕ Bend	=	0.90	
ϕ Shea	=	0.85	
k1	=	0.80	
Es	=	2040000	[kg/cm²]
Ec	=	284553	[kg/cm²]
n	=	7	
ρ	=	0.0360	
ρ_{max}	=	0.0270	
As	=	60.708	[cm²]
a	=	27.208	[cm]
Mu	=	134181	[kg-m]
M1	=	24516	[kg-m]
As'	=	9.7288	[cm²]
No. of steel	=	**2**	
As	=	12.32	[cm²]
Σ As	=	70.437	[cm²]
No. of steel	=	**12**	
As	=	73.89	[cm²]

Section OK

For Negative Moment :

Upper Steel: DB28
Lower Steel: DB28
Stirrup Steel: DB12

d	=	75	[cm]
a try	=	8.7110	[cm]
As	=	31.200	[cm²]
a	=	**13.9832**	[cm]
ϕ Bend	=	0.90	
ϕ Shea	=	0.85	
k1	=	1.05	
Es	=	2040000	[kg/cm²]
Ec	=	284553	[kg/cm²]
n	=	7	
ρ	=	0.0472	
ρ_{max}	=	0.0354	
As	=	79.680	[cm²]
a	=	35.711	[cm]
Mu	=	163917	[kg-m]
M1	=	0	[kg-m]
As'	=	0.0000	[cm²]
No. of steel	=	**2**	
As	=	12.32	[cm²]
Σ As	=	31.200	[cm²]
No. of steel	=	**6**	
As	=	36.95	[cm²]

Section OK

KINGDOM OF THAILAND
CHOKCHAI KHATKHAJORN
โชคชัย ขัดขจร
สย. 4522
REGISTERED PROFESSIONAL ENGINEER

Stirrup Design

$0.53\ \phi\ (fc')^{0.5}\ bd$	=	20079	[kg]
L=Ln/2(Vu - ϕ Vc)/Vu	=	298.5	[cm]
S	=	37.500	[cm]

Used Stirrup 2 | DB12 @ 0.360 | OK

Check Deflection

Δ all	=	2.50	[cm]	
ρ fy	=	131	> 35	[kg/cm²]
Y'	=	36.5		
I	=	1252935	[cm⁴]	
Ec	=	284116	[kg/cm²]	
Δ	=	0.74	[cm] <	Δ all OK
Δ Time	=	1.3	<	Δ all OK

DYNAMIC ENGINEERING CONSULTANT CO., LTD.

RC-I EXCEL — Ultimate Stress Design method in accordance with ACI 318-89

Design Reinforced Concrete Beam

Project	อาคารทิศตะวันออก โซน ซี	Beam Code	B-10
Engineer	CKJ	File Name	Beam
		Date	19 Jun 20

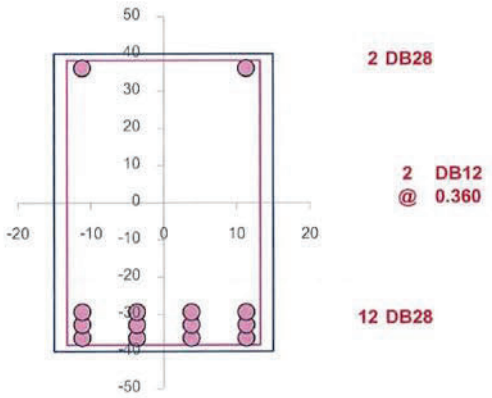

Positive Section
B-10 (30 X 80)

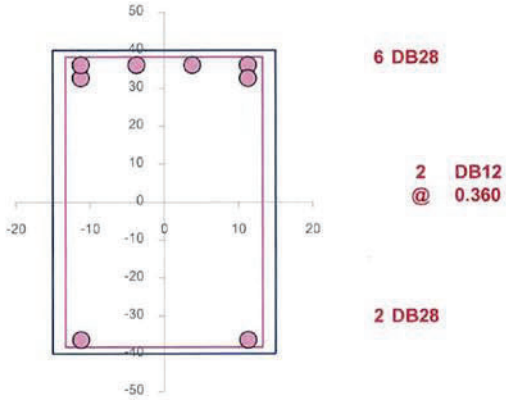

Negative Section
B-10 (30 X 80)

KINGDOM OF THAILAND
CHOKCHAI KHATKHAJORN
โชคชัย ขัดขจร
สย. 4522
REGISTERED PROFESSIONAL ENGINEER

DYNAMIC ENGINEERING CONSULTANT CO., LTD.		Job No.	193018
Design Reinforced Concrete Beam		Rev.	1
(Ultimate Stress Design method in accordance with ACI 318-89)		Initial	CKJ
Beam No.	B-11	Date	13-Aug-20
Project :	อาคารทิศตะวันออก	File	Beam B

	fc'	=	350	[kg/cm^2]
	fy SD	=	4000	[kg/cm^2]
	fy SR	=	2400	[kg/cm^2]
$M_{-pos.}$	Mu^+	=	32285	[kg-m]
$M_{-neg.}$	Mu^-	=	20000	[kg-m]
$V_{max.}$	Vu	=	22317	[kg]
	DL	=	2300	[kg/m]
	LL	=	670	[kg/m]
Length	Ln	=	750	[cm]
width	b	=	25	[cm]
depth	t	=	80	[cm]
	d'	=	5	[cm]
siding	d''	=	3.5	[cm]

For Positive Moment :

Upper Steel	DB 20
Lower Steel	DB 20
Stirrup Steel	RB 9

d	=	75	[cm]
a try	=	6.7330	[cm]
As	=	12.519	[cm^2]
a	=	**6.7331**	[cm]
ϕ Bend	=	0.90	
ϕ Shea	=	0.85	
k1	=	0.80	
Es	=	2040000	[kg/cm^2]
Ec	=	284553	[kg/cm^2]
n	=	7	
ρ	=	0.0360	
ρ_{max}	=	0.0270	
As	=	50.590	[cm^2]
a	=	27.208	[cm]
Mu	=	111817	[kg-m]
M1	=	0	[kg-m]
As'	=	0.0000	[cm^2]
No. of steel	=	**2**	
As	=	6.28	[cm^2]
Σ As	=	12.519	[cm^2]
No. of steel	=	**4**	
As	=	12.57	[cm^2]

Section OK

Stirrup Design

$0.53\ \phi\ (fc')^{0.5}\ bd$	=	16732	[kg]	
L=Ln/2(Vu - ϕ Vc)/Vu	=	136.0	[cm]	
S	=	34.857	[cm]	
Used Stirrup	2	**RB 9 @ 0.300**		**OK**

For Negative Moment :

Upper Steel	DB 20
Lower Steel	DB 20
Stirrup Steel	RB 9

d	=	75	[cm]
a try	=	8.7110	[cm]
As	=	7.756	[cm^2]
a	=	**6.7331**	[cm]
ϕ Bend	=	0.90	
ϕ Shea	=	0.85	
k1	=	1.05	
Es	=	2040000	[kg/cm^2]
Ec	=	284553	[kg/cm^2]
n	=	7	
ρ	=	0.0472	
ρ_{max}	=	0.0354	
As	=	66.400	[cm^2]
a	=	35.711	[cm]
Mu	=	136598	[kg-m]
M1	=	0	[kg-m]
As'	=	0.0000	[cm^2]
No. of steel	=	**2**	
As	=	6.28	[cm^2]
Σ As	=	7.756	[cm^2]
No. of steel	=	**3**	
As	=	9.42	[cm^2]

Section OK

Check Deflection

Δ all	=	2.08	[cm]		
ρ fy	=	27	<	35	[kg/cm^2]
Y'	=	19.7			
I	=	878906	[cm^4]		
Ec	=	284116	[kg/cm^2]		
Δ	=	0.49	[cm] <	Δ all	**OK**
Δ Time	=	0.34	<	Δ all	**OK**

KINGDOM OF THAILAND
CHOKCHAI KHATKHAJORN
โชคชัย ขัดขจร
สย. 4522
REGISTERED PROFESSIONAL ENGINEER

DYNAMIC ENGINEERING CONSULTANT CO., LTD.		Job No.	193018
Design Reinforced Concrete Beam		Rev.	1
(Ultimate Stress Design method in accordance with ACI 318-89)		Initial	CKJ
Beam No.	B-11	Date	13-Aug-20
Project :	อาคารทิศตะวันออก	File	Beam B

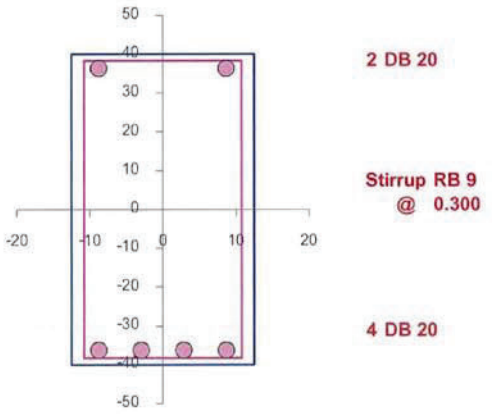

Positive Section

B-11 (25 X 80)

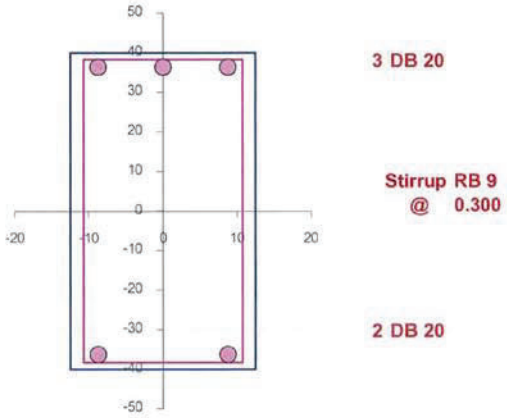

Negative Section

B-11 (25 X 80)

KINGDOM OF THAILAND
CHOKCHAI KHATKHAJORN
โชคชัย ขัดขจร
สย. 4522
REGISTERED PROFESSIONAL ENGINEER

DYNAMIC ENGINEERING CONSULTANT CO., LTD.	Job No.	193018
Design Reinforced Concrete Beam	Rev.	1
(Ultimate Stress Design method in accordance with ACI 318-89)	Initial	CKJ
Beam No. B-12	Date	13-Aug-20
Project : อาคารทิศตะวันออก	File	Beam B

	fc'	=	350	[kg/cm²]
	fy SD	=	4000	[kg/cm²]
	fy SR	=	2400	[kg/cm²]
$M_{-pos.}$	Mu^+	=	48577	[kg-m]
$M_{-neg.}$	Mu^-	=	20000	[kg-m]
$V_{max.}$	Vu	=	22342	[kg]
	DL	=	2555	[kg/m]
	LL	=	1225	[kg/m]
Length	Ln	=	770	[cm]
width	b	=	25	[cm]
depth	t	=	80	[cm]
	d'	=	5	[cm]
siding	d"	=	3.5	[cm]

For Positive Moment :

Upper Steel	DB 25
Lower Steel	DB 25
Stirrup Steel	RB 9

	d	=	75 [cm]
	a try	=	10.3967 [cm]
	As	=	19.331 [cm²]
	a	=	**10.3967** [cm]
	ϕ Bend	=	0.90
	ϕ Shea	=	0.85
	k1	=	0.80
	Es	=	2040000 [kg/cm²]
	Ec	=	284553 [kg/cm²]
	n	=	7
	ρ	=	0.0360
	ρ_{max}	=	0.0270
	As	=	50.590 [cm²]
	a	=	27.208 [cm]
	Mu	=	111817 [kg-m]
	M1	=	0 [kg-m]
	As'	=	0.0000 [cm²]
No. of steel		=	**2**
	As	=	9.82 [cm²]
	Σ As	=	19.331 [cm²]
No. of steel		=	**4**
	As	=	19.63 [cm²]

Section OK

Stirrup Design

$0.53\ \phi\ (fc')^{0.5}$ bd	=	16732	[kg]	
L=Ln/2(Vu - ϕ Vc)/Vu	=	139.9	[cm]	
S	=	34.702	[cm]	
Used Stirrup	2	**RB 9 @ 0.300**		OK

For Negative Moment :

Upper Steel	DB 25
Lower Steel	DB 25
Stirrup Steel	RB 9

	d	=	75 [cm]
	a try	=	8.7110 [cm]
	As	=	7.959 [cm²]
	a	=	**10.3967** [cm]
	ϕ Bend	=	0.90
	ϕ Shea	=	0.85
	k1	=	1.05
	Es	=	2040000 [kg/cm²]
	Ec	=	284553 [kg/cm²]
	n	=	7
	ρ	=	0.0472
	ρ_{max}	=	0.0354
	As	=	66.400 [cm²]
	a	=	35.711 [cm]
	Mu	=	136598 [kg-m]
	M1	=	0 [kg-m]
	As'	=	0.0000 [cm²]
No. of steel		=	**2**
	As	=	9.82 [cm²]
	Σ As	=	7.959 [cm²]
No. of steel		=	**2**
	As	=	9.82 [cm²]

Section OK

Check Deflection

Δ all	=	2.14 [cm]			
ρ fy	=	42	>	35	[kg/cm²]
Y'	=	23.7			
I	=	472644	[cm⁴]		
Ec	=	284116	[kg/cm²]		
Δ	=	1.29 [cm]	<	Δ all	OK
Δ Time	=	0.83	<	Δ all	OK

KINGDOM OF THAILAND
CHOKCHAI KHATKHAJORN
โชคชัย ขัดขจร
สย. 4522
REGISTERED PROFESSIONAL ENGINEER

DYNAMIC ENGINEERING CONSULTANT CO., LTD.		Job No.	193018
Design Reinforced Concrete Beam		Rev.	1
(Ultimate Stress Design method in accordance with ACI 318-89)		Initial	CKJ
Beam No.	B-12	Date	13-Aug-20
Project :	อาคารทิศตะวันออก	File	Beam B

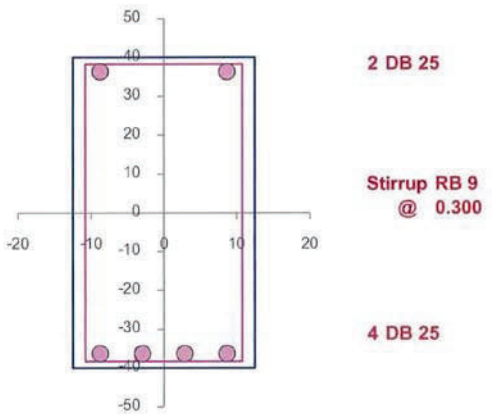

Positive Section

B-12 (25 X 80)

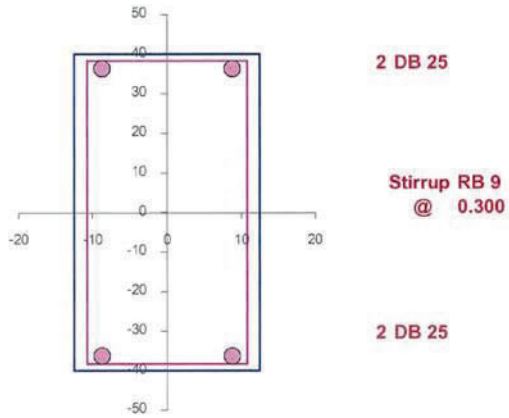

Negative Section

B-12 (25 X 80)

KINGDOM OF THAILAND
CHOKCHAI KHATKHAJORN
โชคชัย ขัดขจร
สย. 4522
REGISTERED PROFESSIONAL ENGINEER

DYNAMIC ENGINEERING CONSULTANT CO., LTD.	Job No.	193018
Design Reinforced Concrete Beam	Rev.	1
(Ultimate Stress Design method in accordance with ACI 318-89)	Initial	CKJ
Beam No. B-13	Date	13-Aug-20
Project : อาคารทิศตะวันออก	File	Beam B

	fc'	=	350	[kg/cm^2]
	fy SD	=	4000	[kg/cm^2]
	fy SR	=	2400	[kg/cm^2]
$M_{-pos.}$	Mu^+	=	74375	[kg-m]
$M_{-neg.}$	Mu^-	=	74375	[kg-m]
$V_{max.}$	Vu	=	45795	[kg]
	DL	=	4610	[kg/m]
	LL	=	1325	[kg/m]
Length	Ln	=	700	[cm]
width	b	=	30	[cm]
depth	t	=	80	[cm]
	d'	=	5	[cm]
siding	d"	=	3.5	[cm]

For Positive Moment :

Upper Steel	DB 28
Lower Steel	DB 28
Stirrup Steel	RB 9

	d	=	75 [cm]
	a try	=	13.5740 [cm]
	As	=	30.287 [cm^2]
	a	=	**13.5740** [cm]
	ϕ Bend	=	0.90
	ϕ Shea	=	0.85
	k1	=	0.80
	Es	=	2040000 [kg/cm^2]
	Ec	=	284553 [kg/cm^2]
	n	=	7
	ρ	=	0.0360
	ρ_{max}	=	0.0270
	As	=	60.708 [cm^2]
	a	=	27.208 [cm]
	Mu	=	134181 [kg-m]
	M1	=	0 [kg-m]
	As'	=	0.0000 [cm^2]
No. of steel		=	**2**
	As	=	12.32 [cm^2]
	Σ As	=	30.287 [cm^2]
No. of steel		=	**5**
	As	=	30.79 [cm^2]

Section OK

Stirrup Design

$0.53\,\phi\,(fc')^{0.5}\,bd$	=	20079	[kg]	
L=Ln/2(Vu - ϕ Vc)/Vu	=	219.6	[cm]	
S	=	7.570	[cm]	
Used Stirrup	2	**RB 9**	**@**	**0.075**	**OK**

For Negative Moment :

Upper Steel	DB 28
Lower Steel	DB 28
Stirrup Steel	RB 9

	d	=	75 [cm]
	a try	=	8.7110 [cm]
	As	=	30.287 [cm^2]
	a	=	**13.5740** [cm]
	ϕ Bend	=	0.90
	ϕ Shea	=	0.85
	k1	=	1.05
	Es	=	2040000 [kg/cm^2]
	Ec	=	284553 [kg/cm^2]
	n	=	7
	ρ	=	0.0472
	ρ_{max}	=	0.0354
	As	=	79.680 [cm^2]
	a	=	35.711 [cm]
	Mu	=	163917 [kg-m]
	M1	=	0 [kg-m]
	As'	=	0.0000 [cm^2]
No. of steel		=	**2**
	As	=	12.32 [cm^2]
	Σ As	=	30.287 [cm^2]
No. of steel		=	**5**
	As	=	30.79 [cm^2]

Section OK

Check Deflection

Δ all	=	1.94 [cm]			
ρ fy	=	55	>	35	[kg/cm^2]
Y'	=	26.4			
I	=	693031	[cm^4]		
Ec	=	284116	[kg/cm^2]		
Δ	=	0.94 [cm]	<	Δ all	**OK**
Δ Time	=	1.63	<	Δ all	**OK**

KINGDOM OF THAILAND
CHOKCHAI KHATKHAJORN
โชคชัย ขัดขจร
สย. 4522
REGISTERED PROFESSIONAL ENGINEER

DYNAMIC ENGINEERING CONSULTANT CO., LTD.	Job No.	193018
Design Reinforced Concrete Beam	Rev.	1
(Ultimate Stress Design method in accordance with ACI 318-89)	Initial	CKJ
Beam No. B-13	Date	13-Aug-20
Project : อาคารทิศตะวันออก	File	Beam B

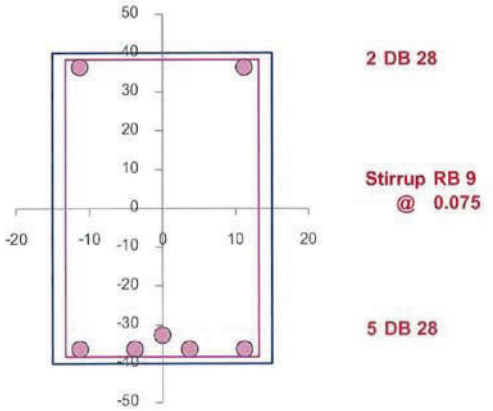

Positive Section

B-13 (30 X 80)

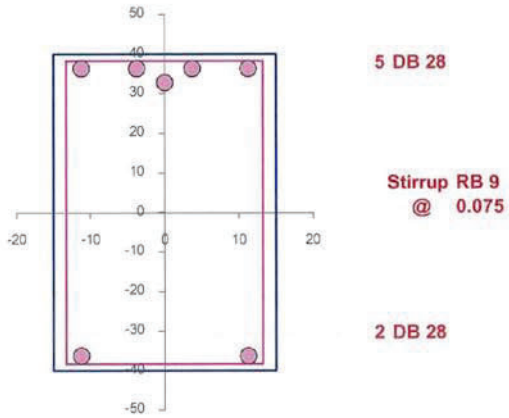

Negative Section

B-13 (30 X 80)

KINGDOM OF THAILAND
CHOKCHAI KHATKHAJORN
โชคชัย ขัดขจร
สย. 4522
REGISTERED PROFESSIONAL ENGINEER

DYNAMIC ENGINEERING CONSULTANT CO., LTD.

RC-I EXCEL — **Ultimate Stress Design method in accordance with ACI 318-89**

Design Reinforced Concrete Beam

Project	อาคารทิศตะวันออก โซน ซี	**Beam Code**	B-13A
Engineer	CKJ	**File Name**	Beam
		Date	19 Jun 20

	fc'	=	350	[kg/cm²]
	fy SD	=	4000	[kg/cm²]
	fy SD	=	4000	[kg/cm²]
$M_{-pos.}$	Mu^{+}	=	110220	[kg-m]
$M_{-neg.}$	Mu^{-}	=	110220	[kg-m]
$V_{max.}$	Vu	=	52364	[kg]
	DL	=	4275	[kg/m]
	LL	=	1075	[kg/m]
Length	Ln	=	700	[cm]
width	b	=	30	[cm]
depth	t	=	80	[cm]
	d'	=	5	[cm]
siding	d"	=	3.5	[cm]

For Positive Moment :

Upper Steel	DB28
Lower Steel	DB28
Stirrup Steel	DB12

d	=	75	[cm]
a try	=	21.3283	[cm]
As	=	47.589	[cm²]
a	=	**21.3283**	[cm]
ϕ Bend	=	0.90	
ϕ Shea	=	0.85	
k1	=	0.80	
Es	=	2040000	[kg/cm²]
Ec	=	284553	[kg/cm²]
n	=	7	
ρ	=	0.0360	
ρ_{max}	=	0.0270	
As	=	60.708	[cm²]
a	=	27.208	[cm]
Mu	=	134181	[kg-m]
M1	=	0	[kg-m]
As'	=	0.0000	[cm²]
No. of steel	=	**2**	
As	=	12.32	[cm²]
Σ As	=	47.589	[cm²]
No. of steel	=	**8**	
As	=	49.26	[cm²]

Section OK

Stirrup Design

$0.53\,\phi\,(fc')^{0.5}\,bd$	=	20079	[kg]
L=Ln/2(Vu - ϕ Vc)/Vu	=	235.9	[cm]
S	=	35.731	[cm]

Used Stirrup 2 | DB12 @ 0.350 | OK

For Negative Moment :

Upper Steel	DB28
Lower Steel	DB28
Stirrup Steel	DB12

d	=	75	[cm]
a try	=	8.7110	[cm]
As	=	43.339	[cm²]
a	=	**19.4237**	[cm]
ϕ Bend	=	0.90	
ϕ Shea	=	0.85	
k1	=	1.05	
Es	=	2040000	[kg/cm²]
Ec	=	284553	[kg/cm²]
n	=	7	
ρ	=	0.0472	
ρ_{max}	=	0.0354	
As	=	79.680	[cm²]
a	=	35.711	[cm]
Mu	=	163917	[kg-m]
M1	=	0	[kg-m]
As'	=	0.0000	[cm²]
No. of steel	=	**2**	
As	=	12.32	[cm²]
Σ As	=	43.339	[cm²]
No. of steel	=	**8**	
As	=	49.26	[cm²]

Section OK

Check Deflection

Δ all	=	1.94	[cm]		
ρ fy	=	88	>	35	[kg/cm²]
Y'	=	31.6			
I	=	965036	[cm⁴]		
Ec	=	284116	[kg/cm²]		
Δ	=	0.61	[cm]	<	Δ all **OK**
Δ Time	=	1.07		<	Δ all **OK**

KINGDOM OF THAILAND
CHOKCHAI KHATKHAJORN
โชคชัย ขัดขจร
สย. 4522
REGISTERED PROFESSIONAL ENGINEER

DYNAMIC ENGINEERING CONSULTANT CO., LTD.

RC-I EXCEL — **Ultimate Stress Design method in accordance with ACI 318-89**

Design Reinforced Concrete Beam

Project	อาคารทิศตะวันออก โซน ซี	Beam Code	B-13A
Engineer	CKJ	File Name	Beam
		Date	19 Jun 20

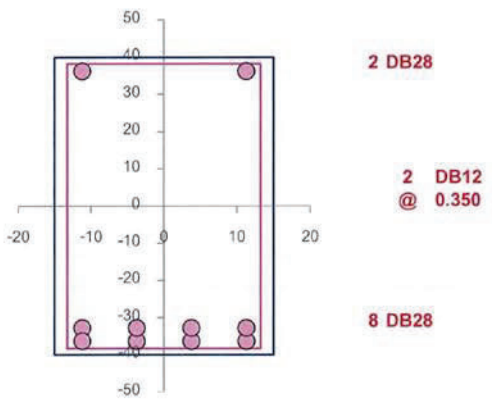

Positive Section
B-13A (30 X 80)

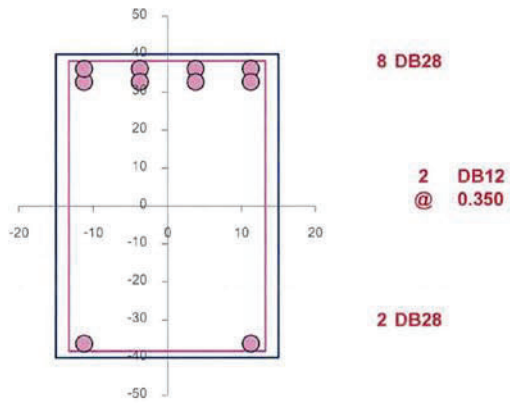

Negative Section
B-13A (30 X 80)

KINGDOM OF THAILAND
CHOKCHAI KHATKHAJORN
โชคชัย ขัดขจร
สย. 4522
REGISTERED PROFESSIONAL ENGINEER

DYNAMIC ENGINEERING CONSULTANT CO., LTD.		Job No.	193018
Design Reinforced Concrete Beam		Rev.	1
(Ultimate Stress Design method in accordance with ACI 318-89)		Initial	CKJ
Beam No.	B-13B	Date	13-Aug-20
Project :	อาคารทิศตะวันออก	File	Beam B

	fc'	=	350	[kg/cm^2]
	fy SD	=	4000	[kg/cm^2]
	fy SR	=	2400	[kg/cm^2]
$M_{-pos.}$	Mu^+	=	18680	[kg-m]
$M_{-neg.}$	Mu^-	=	18680	[kg-m]
$V_{max.}$	Vu	=	20990	[kg]
	DL	=	4300	[kg/m]
	LL	=	1320	[kg/m]
Length	Ln	=	400	[cm]
width	b	=	30	[cm]
depth	t	=	50	[cm]
	d'	=	5	[cm]
siding	d"	=	3.5	[cm]

For Positive Moment :

Upper Steel: DB 20
Lower Steel: DB 20
Stirrup Steel: RB 9

d	=	45	[cm]
a try	=	5.5046	[cm]
As	=	12.282	[cm^2]
a	=	**5.5046**	[cm]
ϕ Bend	=	0.90	
ϕ Shea	=	0.85	
k1	=	0.80	
Es	=	2040000	[kg/cm^2]
Ec	=	284553	[kg/cm^2]
n	=	7	
ρ	=	0.0360	
ρ_{max}	=	0.0270	
As	=	36.425	[cm^2]
a	=	16.325	[cm]
Mu	=	48305	[kg-m]
M1	=	0	[kg-m]
As'	=	0.0000	[cm^2]
No. of steel	=	**2**	
As	=	6.28	[cm^2]
Σ As	=	12.282	[cm^2]
No. of steel	=	**4**	
As	=	12.57	[cm^2]

Section OK

Stirrup Design

$0.53\,\phi\,(fc')^{0.5}\,bd$	=	12047	[kg]
L=Ln/2(Vu - ϕ Vc)/Vu	=	102.4	[cm]
S	=	13.061	[cm]

Used Stirrup RB 9 @ 0.125 OK

For Negative Moment :

Upper Steel: DB 20
Lower Steel: DB 20
Stirrup Steel: RB 9

d	=	45	[cm]
a try	=	8.7110	[cm]
As	=	12.282	[cm^2]
a	=	**5.5046**	[cm]
ϕ Bend	=	0.90	
ϕ Shea	=	0.85	
k1	=	1.05	
Es	=	2040000	[kg/cm^2]
Ec	=	284553	[kg/cm^2]
n	=	7	
ρ	=	0.0472	
ρ_{max}	=	0.0354	
As	=	47.808	[cm^2]
a	=	21.426	[cm]
Mu	=	59010	[kg-m]
M1	=	0	[kg-m]
As'	=	0.0000	[cm^2]
No. of steel	=	**2**	
As	=	6.28	[cm^2]
Σ As	=	12.282	[cm^2]
No. of steel	=	**4**	
As	=	12.57	[cm^2]

Section OK

Check Deflection

Δ all	=	1.11	[cm]		
ρ fy	=	37	>	35	[kg/cm^2]
Y'	=	13.6			
I	=	111884	[cm^4]		
Ec	=	284116	[kg/cm^2]		
Δ	=	0.59	[cm] <	Δ all	OK
Δ Time	=	0.41	<	Δ all	OK

KINGDOM OF THAILAND
CHOKCHAI KHATKHAJORN
โชคชัย ขัดขจร
สย. 4522
REGISTERED PROFESSIONAL ENGINEER

DYNAMIC ENGINEERING CONSULTANT CO., LTD.	Job No.	193018
Design Reinforced Concrete Beam	Rev.	1
(Ultimate Stress Design method in accordance with ACI 318-89)	Initial	CKJ
Beam No. B-13B	Date	13-Aug-20
Project : อาคารทิศตะวันออก	File	Beam B

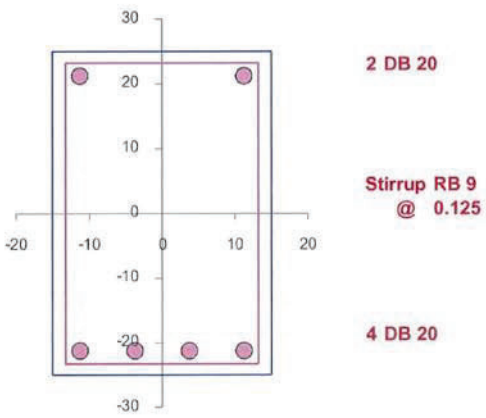

Positive Section

B-13B (30 X 50)

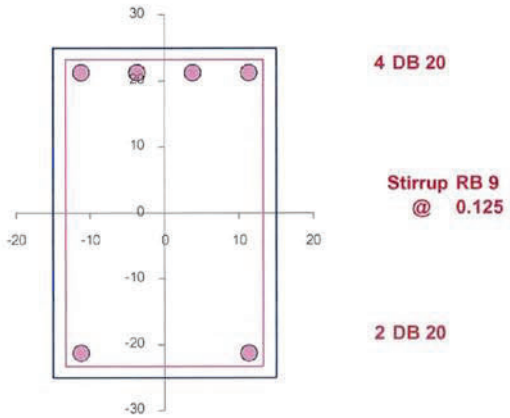

Negative Section

B-13B (30 X 50)

KINGDOM OF THAILAND
CHOKCHAI KHATKHAJORN
โชคชัย ขัดขจร
สย. 4522
REGISTERED PROFESSIONAL ENGINEER

DYNAMIC ENGINEERING CONSULTANT CO., LTD.

RC-I EXCEL — **Ultimate Stress Design method in accordance with ACI 318-89**

Design Reinforced Concrete Beam

Project	อาคารทิศตะวันออก โซน ซี	**Beam Code**	B-14
Engineer	CKJ	**File Name**	Beam
		Date	19 Jun 20

	fc'	=	350	[kg/cm^2]
	fy SD	=	4000	[kg/cm^2]
	fy SD	=	4000	[kg/cm^2]
$M_{-pos.}$	Mu^+	=	93412	[kg-m]
$M_{-neg.}$	Mu^-	=	50000	[kg-m]
$V_{max.}$	Vu	=	86562	[kg]
	DL	=	3715	[kg/m]
	LL	=	1435	[kg/m]
Length	Ln	=	780	[cm]
width	b	=	40	[cm]
depth	t	=	80	[cm]
	d'	=	5	[cm]
siding	d"	=	3.5	[cm]

For Positive Moment :

Upper Steel	DB28
Lower Steel	DB28
Stirrup Steel	DB12

	d	=	75	[cm]
	a try	=	12.7055	[cm]
	As	=	37.799	[cm^2]
	a	=	**12.7054**	[cm]
	ϕ Bend	=	0.90	
	ϕ Shea	=	0.85	
	k1	=	0.80	
	Es	=	2040000	[kg/cm^2]
	Ec	=	284553	[kg/cm^2]
	n	=	7	
	ρ	=	0.0360	
	ρ_{max}	=	0.0270	
	As	=	80.944	[cm^2]
	a	=	27.208	[cm]
	Mu	=	178907	[kg-m]
	M1	=	0	[kg-m]
	As'	=	0.0000	[cm^2]
No. of steel		=	**2**	
	As	=	12.32	[cm^2]
	Σ As	=	37.799	[cm^2]
No. of steel		=	**7**	
	As	=	43.10	[cm^2]

Section OK

For Negative Moment :

Upper Steel	DB28
Lower Steel	DB28
Stirrup Steel	DB12

	d	=	75	[cm]
	a try	=	8.7110	[cm]
	As	=	19.660	[cm^2]
	a	=	**6.6085**	[cm]
	ϕ Bend	=	0.90	
	ϕ Shea	=	0.85	
	k1	=	1.05	
	Es	=	2040000	[kg/cm^2]
	Ec	=	284553	[kg/cm^2]
	n	=	7	
	ρ	=	0.0472	
	ρ_{max}	=	0.0354	
	As	=	106.239	[cm^2]
	a	=	35.711	[cm]
	Mu	=	218556	[kg-m]
	M1	=	0	[kg-m]
	As'	=	0.0000	[cm^2]
No. of steel		=	**2**	
	As	=	12.32	[cm^2]
	Σ As	=	19.660	[cm^2]
No. of steel		=	**4**	
	As	=	24.63	[cm^2]

Section OK

Stirrup Design

$0.53\ \phi\ (fc')^{0.5}\ bd$	=	26772	[kg]	
L=Ln/2(Vu - ϕ Vc)/Vu	=	287.5	[cm]	
S	=	18.750	[cm]	
Used Stirrup	2	DB12 @ 0.175		OK

Check Deflection

Δ all	=	2.17	[cm]		
ρ fy	=	57	>	35	[kg/cm^2]
Y'	=	26.9			
I	=	957593	[cm^4]		
Ec	=	284116	[kg/cm^2]		
Δ	=	0.91	[cm] <	Δ all	OK
Δ Time	=	1.52	<	Δ all	OK

KINGDOM OF THAILAND
CHOKCHAI KHATKHAJORN
โชคชัย ขัดขจร
สบ. 4522
REGISTERED PROFESSIONAL ENGINEER

DYNAMIC ENGINEERING CONSULTANT CO., LTD.

RC-I EXCEL — Ultimate Stress Design method in accordance with ACI 318-89

Design Reinforced Concrete Beam

Project	อาคารทิศตะวันออก โซน ซี	Beam Code	B-14
Engineer	CKJ	File Name	Beam
		Date	19 Jun 20

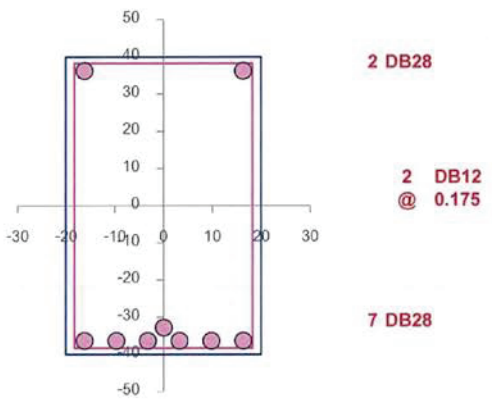

Positive Section
B-14 (40 X 80)

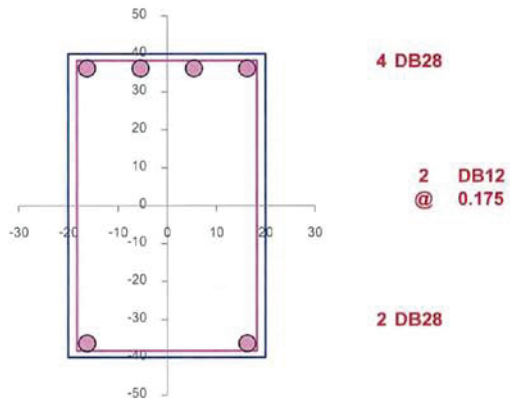

Negative Section
B-14 (40 X 80)

KINGDOM OF THAILAND
CHOKCHAI KHATKHAJORN
โชคชัย ขัดขจร
สย. 4522
REGISTERED PROFESSIONAL ENGINEER

DYNAMIC ENGINEERING CONSULTANT CO., LTD.

Design Reinforced Concrete Beam

(Ultimate Stress Design method in accordance with ACI 318-89)

Job No.	193018	Beam No.	B-14A
Rev.	1	Project :	อาคารทิศตะวันออก
Initial	CKJ		
Date	13-Aug-20		
File	Beam B		

	fc'	=	350	[kg/cm^2]
	fy SD	=	4000	[kg/cm^2]
	fy SR	=	2400	[kg/cm^2]
$M_{-pos.}$	Mu^+	=	43478	[kg-m]
$M_{-neg.}$	Mu^-	=	43478	[kg-m]
$V_{max.}$	Vu	=	25587	[kg]
	DL	=	3245	[kg/m]
	LL	=	1435	[kg/m]
Length	Ln	=	500	[cm]
width	b	=	25	[cm]
depth	t	=	80	[cm]
	d'	=	5	[cm]
siding	d"	=	3.5	[cm]

For Positive Moment :

Upper Steel	DB 25
Lower Steel	DB 25
Stirrup Steel	RB 9

d	=	75	[cm]
a try	=	9.2281	[cm]
As	=	17.159	[cm^2]
a	=	**9.2281**	[cm]
ϕ Bend	=	0.90	
ϕ Shea	=	0.85	
k1	=	0.80	
Es	=	2040000	[kg/cm^2]
Ec	=	284553	[kg/cm^2]
n	=	7	
ρ	=	0.0360	
ρ_{max}	=	0.0270	
As	=	50.590	[cm^2]
a	=	27.208	[cm]
Mu	=	111817	[kg-m]
M1	=	0	[kg-m]
As'	=	0.0000	[cm^2]
No. of steel	=	**2**	
As	=	9.82	[cm^2]
Σ As	=	17.159	[cm^2]
No. of steel	=	**4**	
As	=	19.63	[cm^2]

Section OK

Stirrup Design

$0.53\ \phi\ (fc')^{0.5}$ bd	=	16732	[kg]
L=Ln/2(Vu - ϕ Vc)/Vu	=	111.0	[cm]
S	=	21.985	[cm]
Used Stirrup		RB 9 @ 0.200	OK

For Negative Moment :

Upper Steel	DB 25
Lower Steel	DB 25
Stirrup Steel	RB 9

d	=	75	[cm]
a try	=	8.7110	[cm]
As	=	17.159	[cm^2]
a	=	**9.2281**	[cm]
ϕ Bend	=	0.90	
ϕ Shea	=	0.85	
k1	=	1.05	
Es	=	2040000	[kg/cm^2]
Ec	=	284553	[kg/cm^2]
n	=	7	
ρ	=	0.0472	
ρ_{max}	=	0.0354	
As	=	66.400	[cm^2]
a	=	35.711	[cm]
Mu	=	136598	[kg-m]
M1	=	0	[kg-m]
As'	=	0.0000	[cm^2]
No. of steel	=	**2**	
As	=	9.82	[cm^2]
Σ As	=	17.159	[cm^2]
No. of steel	=	**4**	
As	=	19.63	[cm^2]

Section OK

Check Deflection

Δ all	=	1.39	[cm]		
ρ fy	=	42	>	35	[kg/cm^2]
Y'	=	23.7			
I	=	472644	[cm^4]		
Ec	=	284116	[kg/cm^2]		
Δ	=	0.28	[cm] <	Δ all	OK
Δ Time	=	0.19	<	Δ all	OK

KINGDOM OF THAILAND
CHOKCHAI KHATKHAJORN
โชคชัย ขัดขจร
สบ. 4522
REGISTERED PROFESSIONAL ENGINEER

DYNAMIC ENGINEERING CONSULTANT CO., LTD.	Job No.	193018
Design Reinforced Concrete Beam	Rev.	1
(Ultimate Stress Design method in accordance with ACI 318-89)	Initial	CKJ
Beam No. B-14A	Date	13-Aug-20
Project : อาคารทิศตะวันออก	File	Beam B

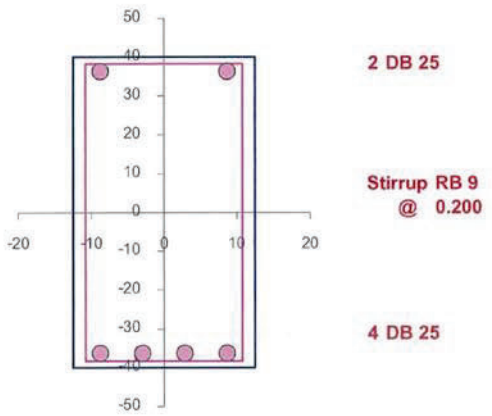

Positive Section
B-14A (25 X 80)

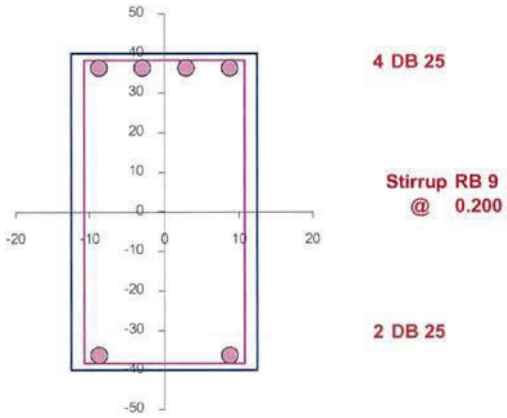

Negative Section
B-14A (25 X 80)

KINGDOM OF THAILAND
CHOKCHAI KHATKHAJORN
โชคชัย ขัดขจร
สย. 4522
REGISTERED PROFESSIONAL ENGINEER

DYNAMIC ENGINEERING CONSULTANT CO., LTD.

RC-I EXCEL — **Ultimate Stress Design method in accordance with ACI 318-89**

Design Reinforced Concrete Beam

Project	อาคารทิศตะวันออก โซน ซี	**Beam Code**	B-15
Engineer	CKJ	**File Name**	Beam
		Date	4 Aug 20

	fc'	=	350	[kg/cm²]
	fy SD	=	4000	[kg/cm²]
	fy SD	=	4000	[kg/cm²]
$M_{+pos.}$	Mu⁺	=	78467	[kg-m]
$M_{-neg.}$	Mu⁻	=	78467	[kg-m]
$V_{max.}$	Vu	=	71000	[kg]
	DL	=	4700	[kg/m]
	LL	=	1400	[kg/m]
Length	Ln	=	700	[cm]
width	b	=	30	[cm]
depth	t	=	80	[cm]
	d'	=	5	[cm]
siding	d"	=	3.5	[cm]

For Positive Moment :

Upper Steel	DB28
Lower Steel	DB28
Stirrup Steel	DB12

d	=	75	[cm]
a try	=	14.4091	[cm]
As	=	32.150	[cm²]
a	=	**14.4091**	[cm]
ϕ Bend	=	0.90	
ϕ Shea	=	0.85	
k1	=	0.80	
Es	=	2040000	[kg/cm²]
Ec	=	284553	[kg/cm²]
n	=	7	
ρ	=	0.0360	
ρ_{max}	=	0.0270	
As	=	60.708	[cm²]
a	=	27.208	[cm]
Mu	=	134181	[kg-m]
M1	=	0	[kg-m]
As'	=	0.0000	[cm²]
No. of steel	=	**2**	
As	=	12.32	[cm²]
Σ As	=	32.150	[cm²]
No. of steel	=	**6**	
As	=	36.95	[cm²]

Section OK

Stirrup Design

$0.53\,\phi\,(fc')^{0.5}\,bd$	=	20079	[kg]
L=Ln/2(Vu - ϕ Vc)/Vu	=	265.9	[cm]
S	=	18.750	[cm]

Used Stirrup 2 DB12 @ 0.175 **OK**

For Negative Moment :

Upper Steel	DB28
Lower Steel	DB28
Stirrup Steel	DB12

d	=	75	[cm]
a try	=	8.7110	[cm]
As	=	30.854	[cm²]
a	=	**13.8280**	[cm]
ϕ Bend	=	0.90	
ϕ Shea	=	0.85	
k1	=	1.05	
Es	=	2040000	[kg/cm²]
Ec	=	284553	[kg/cm²]
n	=	7	
ρ	=	0.0472	
ρ_{max}	=	0.0354	
As	=	79.680	[cm²]
a	=	35.711	[cm]
Mu	=	163917	[kg-m]
M1	=	0	[kg-m]
As'	=	0.0000	[cm²]
No. of steel	=	**2**	
As	=	12.32	[cm²]
Σ As	=	30.854	[cm²]
No. of steel	=	**6**	
As	=	36.95	[cm²]

Section OK

Check Deflection

Δ all	=	1.94	[cm]		
ρ fy	=	66	>	35	[kg/cm²]
Y'	=	28.4			
I	=	790661	[cm⁴]		
Ec	=	284116	[kg/cm²]		
Δ	=	0.85	[cm] <	Δ all	**OK**
Δ Time	=	1.46	<	Δ all	**OK**

KINGDOM OF THAILAND
CHOKCHAI KHATKHAJORN
โชคชัย ขัดขจร
สย. 4522
REGISTERED PROFESSIONAL ENGINEER

DYNAMIC ENGINEERING CONSULTANT CO., LTD.

RC-I EXCEL — **Ultimate Stress Design method in accordance with ACI 318-89**

Design Reinforced Concrete Beam

Project	อาคารทิศตะวันออก โซน ซี	**Beam Code**	B-15
Engineer	CKJ	**File Name**	Beam
		Date	4 Aug 20

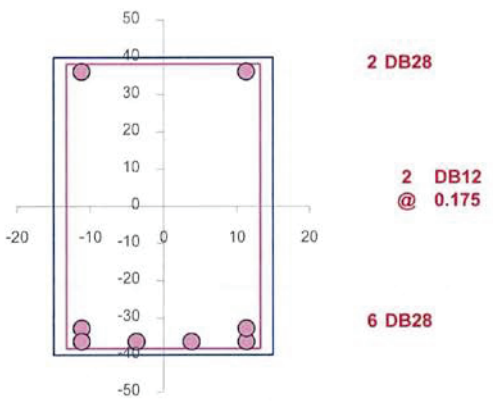

Positive Section

B-15 (30 X 80)

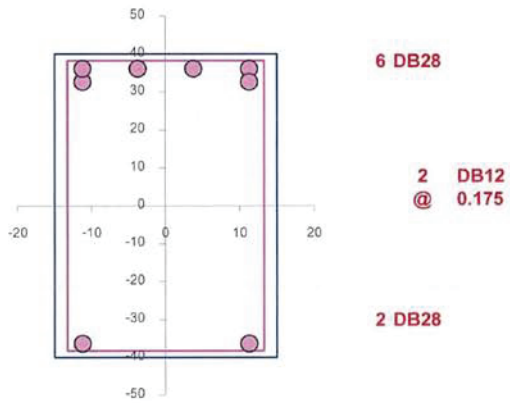

Negative Section

B-15 (30 X 80)

KINGDOM OF THAILAND
CHOKCHAI KHATKHAJORN
โชคชัย ขัดขจร
สย. 4522
REGISTERED PROFESSIONAL ENGINEER

DYNAMIC ENGINEERING CONSULTANT CO., LTD.		Job No.	193018
Design Reinforced Concrete Beam		Rev.	1
(Ultimate Stress Design method in accordance with ACI 318-89)		Initial	CKJ
Beam No.	B-15A	Date	13-Aug-20
Project :	อาคารทิศตะวันออก	File	Beam B

	fc'	=	350	[kg/cm^2]
	fy SD	=	4000	[kg/cm^2]
	fy SR	=	2400	[kg/cm^2]
$M_{-pos.}$	Mu^+	=	41829	[kg-m]
$M_{-neg.}$	Mu^-	=	41829	[kg-m]
$V_{max.}$	Vu	=	28310	[kg]
	DL	=	4700	[kg/m]
	LL	=	1400	[kg/m]
Length	Ln	=	600	[cm]
width	b	=	30	[cm]
depth	t	=	60	[cm]
	d'	=	5	[cm]
siding	d"	=	3.5	[cm]

For Positive Moment :

Upper Steel	DB 28
Lower Steel	DB 28
Stirrup Steel	RB 9

	d	=	55	[cm]
	a try	=	10.4634	[cm]
	As	=	23.347	[cm^2]
	a	=	**10.4634**	[cm]
	ϕ Bend	=	0.90	
	ϕ Shea	=	0.85	
	k1	=	0.80	
	Es	=	2040000	[kg/cm^2]
	Ec	=	284553	[kg/cm^2]
	n	=	7	
	ρ	=	0.0360	
	ρ_{max}	=	0.0270	
	As	=	44.519	[cm^2]
	a	=	19.953	[cm]
	Mu	=	72159	[kg-m]
	M1	=	0	[kg-m]
	As'	=	0.0000	[cm^2]
No. of steel		=	**2**	
	As	=	12.32	[cm^2]
	Σ As	=	23.347	[cm^2]
No. of steel		=	**4**	
	As	=	24.63	[cm^2]

Section OK

Stirrup Design

$0.53\ \phi\ (fc')^{0.5}\ bd$	=	14724	[kg]	
L=Ln/2(Vu - ϕ Vc)/Vu	=	167.4	[cm]	
S	=	10.508	[cm]	
Used Stirrup	2	**RB 9 @ 0.100**		**OK**

For Negative Moment :

Upper Steel	DB 28
Lower Steel	DB 28
Stirrup Steel	RB 9

	d	=	55	[cm]
	a try	=	8.7110	[cm]
	As	=	23.347	[cm^2]
	a	=	**10.4634**	[cm]
	ϕ Bend	=	0.90	
	ϕ Shea	=	0.85	
	k1	=	1.05	
	Es	=	2040000	[kg/cm^2]
	Ec	=	284553	[kg/cm^2]
	n	=	7	
	ρ	=	0.0472	
	ρ_{max}	=	0.0354	
	As	=	58.432	[cm^2]
	a	=	26.188	[cm]
	Mu	=	88151	[kg-m]
	M1	=	0	[kg-m]
	As'	=	0.0000	[cm^2]
No. of steel		=	**2**	
	As	=	12.32	[cm^2]
	Σ As	=	23.347	[cm^2]
No. of steel		=	**4**	
	As	=	24.63	[cm^2]

Section OK

Check Deflection

Δ all	=	1.67	[cm]		
ρ fy	=	60	>	35	[kg/cm^2]
Y'	=	20			
I	=	291201	[cm^4]		
Ec	=	284116	[kg/cm^2]		
Δ	=	1.24	[cm] <	Δ all	**OK**
Δ Time	=	0.86	<	Δ all	**OK**

KINGDOM OF THAILAND
CHOKCHAI KHATKHAJORN
โชคชัย ขัดขจร
สย. 4522
REGISTERED PROFESSIONAL ENGINEER

DYNAMIC ENGINEERING CONSULTANT CO., LTD.	Job No.	193018
Design Reinforced Concrete Beam	Rev.	1
(Ultimate Stress Design method in accordance with ACI 318-89)	Initial	CKJ
Beam No. B-15A	Date	13-Aug-20
Project : อาคารทิศตะวันออก	File	Beam B

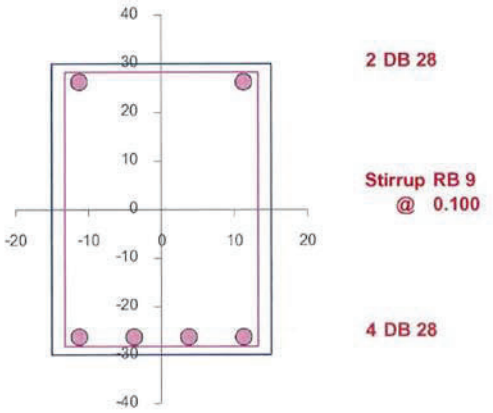

Positive Section
B-15A (30 X 60)

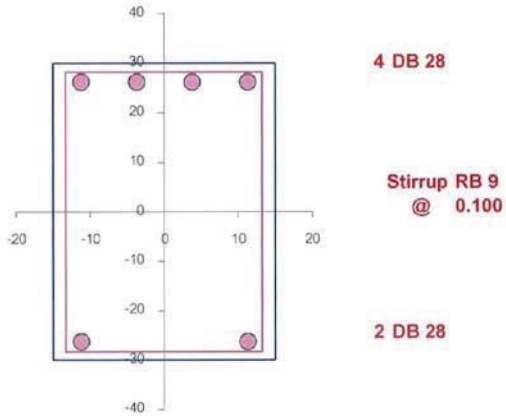

Negative Section
B-15A (30 X 60)

KINGDOM OF THAILAND
CHOKCHAI KHATKHAJORN
โชคชัย ขัตขจร
สย. 4522
REGISTERED PROFESSIONAL ENGINEER

DYNAMIC ENGINEERING CONSULTANT CO., LTD.

RC-I EXCEL — Ultimate Stress Design method in accordance with ACI 318-89

Design Reinforced Concrete Beam

Project	อาคารทิศตะวันออก โซน ซี	Beam Code	4B-3A
Engineer	CKJ	File Name	Beam
		Date	4 Aug 20

	fc'	=	350	[kg/cm²]
	fy SD	=	4000	[kg/cm²]
	fy SD	=	4000	[kg/cm²]
$M_{-pos.}$	Mu^{+}	=	35354	[kg-m]
$M_{-neg.}$	Mu^{-}	=	35354	[kg-m]
$V_{max.}$	Vu	=	21265	[kg]
	DL	=	2350	[kg/m]
	LL	=	900	[kg/m]
Length	Ln	=	610	[cm]
width	b	=	25	[cm]
depth	t	=	60	[cm]
	d'	=	5	[cm]
siding	d"	=	3.5	[cm]

For Positive Moment :

Upper Steel: DB28
Lower Steel: DB28
Stirrup Steel: DB12

d	=	55	[cm]
a try	=	10.6303	[cm]
As	=	19.766	[cm²]
a	=	**10.6303**	[cm]
ϕ Bend	=	0.90	
ϕ Shea	=	0.85	
k1	=	0.80	
Es	=	2040000	[kg/cm²]
Ec	=	284553	[kg/cm²]
n	=	7	
ρ	=	0.0360	
ρ_{max}	=	0.0270	
As	=	37.099	[cm²]
a	=	19.953	[cm]
Mu	=	60133	[kg-m]
M1	=	0	[kg-m]
As'	=	0.0000	[cm²]
No. of steel	=	**2**	
As	=	12.32	[cm²]
Σ As	=	19.766	[cm²]
No. of steel	=	**4**	
As	=	24.63	[cm²]

Section OK

Stirrup Design

$0.53\,\phi\,(fc')^{0.5}\,bd$	=	12270	[kg]
L=Ln/2(Vu - ϕ Vc)/Vu	=	155.4	[cm]
S	=	27.500	[cm]

Used Stirrup 1 DB12 @ 0.250 OK

For Negative Moment :

Upper Steel: DB28
Lower Steel: DB28
Stirrup Steel: DB12

d	=	55	[cm]
a try	=	8.7110	[cm]
As	=	19.391	[cm²]
a	=	**10.4289**	[cm]
ϕ Bend	=	0.90	
ϕ Shea	=	0.85	
k1	=	1.05	
Es	=	2040000	[kg/cm²]
Ec	=	284553	[kg/cm²]
n	=	7	
ρ	=	0.0472	
ρ_{max}	=	0.0354	
As	=	48.693	[cm²]
a	=	26.188	[cm]
Mu	=	73459	[kg-m]
M1	=	0	[kg-m]
As'	=	0.0000	[cm²]
No. of steel	=	**2**	
As	=	12.32	[cm²]
Σ As	=	19.391	[cm²]
No. of steel	=	**4**	
As	=	24.63	[cm²]

Section OK

Check Deflection

Δ all	=	1.69	[cm]		
ρ fy	=	72	>	35	[kg/cm²]
Y'	=	21.5			
I	=	276308	[cm⁴]		
Ec	=	284116	[kg/cm²]		
Δ	=	0.75	[cm]	<	Δ all OK
Δ Time	=	0.5		<	Δ all OK

KINGDOM OF THAILAND
CHOKCHAI KHATKHAJORN
โชคชัย ขัดขจร
สย. 4522
REGISTERED PROFESSIONAL ENGINEER

DYNAMIC ENGINEERING CONSULTANT CO., LTD.

RC-I EXCEL — **Ultimate Stress Design method in accordance with ACI 318-89**

Design Reinforced Concrete Beam

Project	อาคารทิศตะวันออก โซน ซี	Beam Code	4B-3A
Engineer	CKJ	File Name	Beam
		Date	4 Aug 20

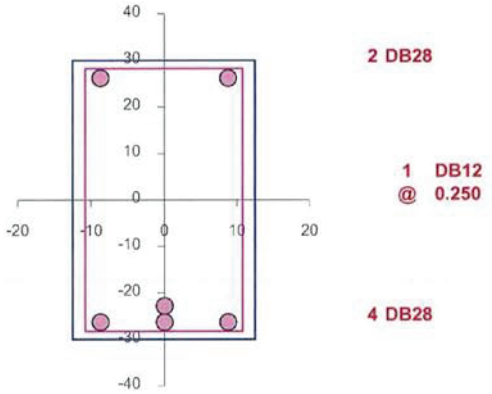

Positive Section
4B-3A (25 X 60)

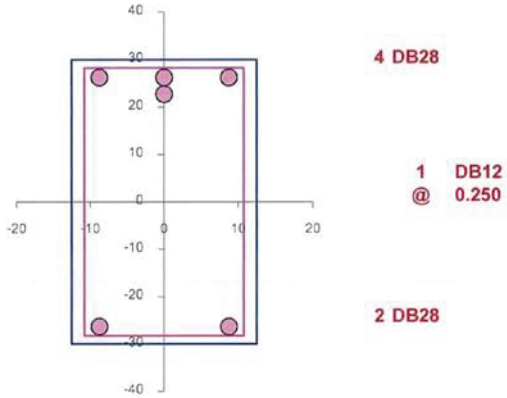

Negative Section
4B-3A (25 X 60)

KINGDOM OF THAILAND
CHOKCHAI KHATKHAJORN
โชคชัย ขัดขจร
สย. 4522
REGISTERED PROFESSIONAL ENGINEER

DYNAMIC ENGINEERING CONSULTANT CO., LTD.

RC-I EXCEL — **Ultimate Stress Design method in accordance with ACI 318-89**

Design Reinforced Concrete Beam

Project	อาคารทิศตะวันออก โซน ซี	**Beam Code**	4B-3B
Engineer	CKJ	**File Name**	Beam
		Date	4 Aug 20

	fc'	=	350	[kg/cm²]
	fy SD	=	4000	[kg/cm²]
	fy SD	=	4000	[kg/cm²]
$M_{+pos.}$	Mu⁺	=	67250	[kg-m]
$M_{-neg.}$	Mu⁻	=	134499	[kg-m]
$V_{max.}$	Vu	=	55416	[kg]
	DL	=	1815	[kg/m]
	LL	=	1020	[kg/m]
Length	Ln	=	260	[cm]
width	b	=	30	[cm]
depth	t	=	80	[cm]
	d'	=	5	[cm]
siding	d"	=	3.5	[cm]

For Positive Moment :

Upper Steel	DB28
Lower Steel	DB28
Stirrup Steel	DB12

	d	=	75 [cm]
	a try	=	12.1465 [cm]
	As	=	27.102 [cm²]
	a	=	**12.1466** [cm]
	ϕ Bend	=	0.90
	ϕ Shea	=	0.85
	k1	=	0.80
	Es	=	2040000 [kg/cm²]
	Ec	=	284553 [kg/cm²]
	n	=	7
	ρ	=	0.0360
	ρ_{max}	=	0.0270
	As	=	60.708 [cm²]
	a	=	27.208 [cm]
	Mu	=	134181 [kg-m]
	M1	=	0 [kg-m]
	As'	=	0.0000 [cm²]
No. of steel		=	**2**
	As	=	12.32 [cm²]
	Σ As	=	27.102 [cm²]
No. of steel		=	**5**
	As	=	30.79 [cm²]

Section OK

For Negative Moment :

Upper Steel	DB28
Lower Steel	DB28
Stirrup Steel	DB12

	d	=	75 [cm]
	a try	=	8.7110 [cm]
	As	=	52.886 [cm²]
	a	=	**23.7023** [cm]
	ϕ Bend	=	0.90
	ϕ Shea	=	0.85
	k1	=	1.05
	Es	=	2040000 [kg/cm²]
	Ec	=	284553 [kg/cm²]
	n	=	7
	ρ	=	0.0472
	ρ_{max}	=	0.0354
	As	=	79.680 [cm²]
	a	=	35.711 [cm]
	Mu	=	163917 [kg-m]
	M1	=	0 [kg-m]
	As'	=	0.0000 [cm²]
No. of steel		=	**2**
	As	=	12.32 [cm²]
	Σ As	=	52.886 [cm²]
No. of steel		=	**9**
	As	=	55.42 [cm²]

Section OK

Stirrup Design

$0.53\,\phi\,(fc')^{0.5}\,bd$	=	20079	[kg]	
L=Ln/2(Vu - ϕ Vc)/Vu	=	90.0	[cm]	
S	=	32.645	[cm]	
Used Stirrup	2	DB12 @ 0.300		OK

Check Deflection

Δ all	=	0.72 [cm]		
ρ fy	=	55	>	35 [kg/cm²]
Y'	=	26.4		
I	=	693031	[cm⁴]	
Ec	=	284116	[kg/cm²]	
Δ	=	0.01 [cm]	<	Δ all **OK**
Δ Time	=	0.01	<	Δ all **OK**

KINGDOM OF THAILAND
CHOKCHAI KHATKHAJORN
โชคชัย ขัดขจร
สย. 4522
REGISTERED PROFESSIONAL ENGINEER

DYNAMIC ENGINEERING CONSULTANT CO., LTD.

RC-I EXCEL — **Ultimate Stress Design method in accordance with ACI 318-89**

Design Reinforced Concrete Beam		**Beam Code**	**4B-3B**
Project	อาคารทิศตะวันออก โซน ซี	**File Name**	Beam
Engineer	CKJ	**Date**	4 Aug 20

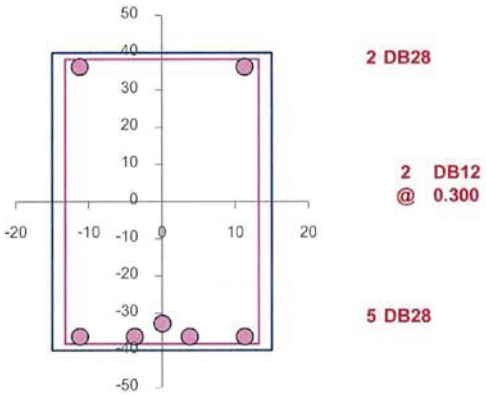

Positive Section

4B-3B (30 X 80)

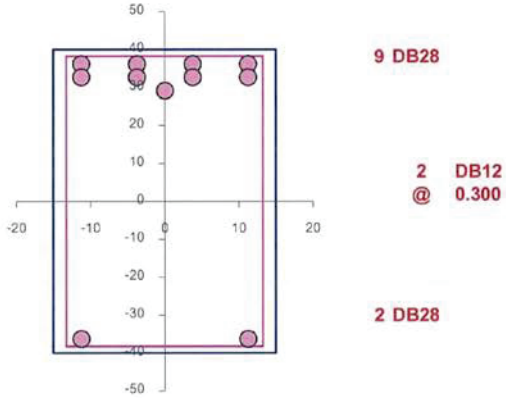

Negative Section

4B-3B (30 X 80)

KINGDOM OF THAILAND
CHOKCHAI KHATKHAJORN
โชคชัย ขัดขจร
สย. 4522
REGISTERED PROFESSIONAL ENGINEER

DYNAMIC ENGINEERING CONSULTANT CO., LTD.	Job No.	193018
Design Reinforced Concrete Beam	Rev.	1
(Ultimate Stress Design method in accordance with ACI 318-89)	Initial	CKJ
Beam No. 4B-3C	Date	13-Aug-20
Project : อาคารทิศตะวันออก	File	Beam B

	fc'	=	350	[kg/cm^2]
	fy SD	=	4000	[kg/cm^2]
	fy SR	=	2400	[kg/cm^2]
$M_{-pos.}$	Mu^+	=	25000	[kg-m]
$M_{-neg.}$	Mu^-	=	34585	[kg-m]
$V_{max.}$	Vu	=	32620	[kg]
	DL	=	4675	[kg/m]
	LL	=	1580	[kg/m]
Length	Ln	=	120	[cm]
width	b	=	30	[cm]
depth	t	=	70	[cm]
	d'	=	5	[cm]
siding	d''	=	3.5	[cm]

For Positive Moment :

Upper Steel	DB 25
Lower Steel	DB 25
Stirrup Steel	RB 9

d	=	65	[cm]
a try	=	4.9789	[cm]
As	=	11.109	[cm^2]
a	=	**4.9789**	[cm]
ϕ Bend	=	0.90	
ϕ Shea	=	0.85	
k1	=	0.80	
Es	=	2040000	[kg/cm^2]
Ec	=	284553	[kg/cm^2]
n	=	7	
ρ	=	0.0360	
ρ_{max}	=	0.0270	
As	=	52.614	[cm^2]
a	=	23.580	[cm]
Mu	=	100784	[kg-m]
M1	=	0	[kg-m]
As'	=	0.0000	[cm^2]
No. of steel	=	**2**	
As	=	9.82	[cm^2]
Σ As	=	11.109	[cm^2]
No. of steel	=	**3**	
As	=	14.73	[cm^2]

Section OK

Stirrup Design

$0.53\ \phi\ (fc')^{0.5}$ bd	=	17402	[kg]	
L=Ln/2(Vu - ϕ Vc)/Vu	=	32.8	[cm]	
S	=	11.086	[cm]	
Used Stirrup	2	**RB 9 @ 0.100**		**OK**

For Negative Moment :

Upper Steel	DB 25
Lower Steel	DB 25
Stirrup Steel	RB 9

d	=	65	[cm]
a try	=	8.7110	[cm]
As	=	15.369	[cm^2]
a	=	**4.9789**	[cm]
ϕ Bend	=	0.90	
ϕ Shea	=	0.85	
k1	=	1.05	
Es	=	2040000	[kg/cm^2]
Ec	=	284553	[kg/cm^2]
n	=	7	
ρ	=	0.0472	
ρ_{max}	=	0.0354	
As	=	69.056	[cm^2]
a	=	30.949	[cm]
Mu	=	123120	[kg-m]
M1	=	0	[kg-m]
As'	=	0.0000	[cm^2]
No. of steel	=	**2**	
As	=	9.82	[cm^2]
Σ As	=	15.369	[cm^2]
No. of steel	=	**4**	
As	=	19.63	[cm^2]

Section OK

Check Deflection

Δ all	=	0.33	[cm]		
ρ fy	=	30	<	35	[kg/cm^2]
Y'	=	18			
I	=	686563	[cm^4]		
Ec	=	284116	[kg/cm^2]		
Δ	=	0.00	[cm] <	Δ all	**OK**
Δ Time	=	0	<	Δ all	**OK**

KINGDOM OF THAILAND
CHOKCHAI KHATKHAJORN
โชคชัย ขัดขจร
สย. 4522
REGISTERED PROFESSIONAL ENGINEER

DYNAMIC ENGINEERING CONSULTANT CO., LTD.		Job No.	193018
Design Reinforced Concrete Beam		Rev.	1
(Ultimate Stress Design method in accordance with ACI 318-89)		Initial	CKJ
Beam No.	4B-3C	Date	13-Aug-20
Project :	อาคารทิศตะวันออก	File	Beam B

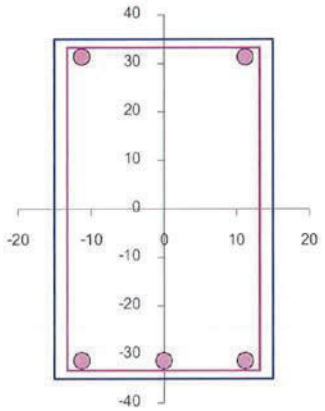

2 DB 25

Stirrup RB 9
@ 0.100

3 DB 25

Positive Section

4B-3C (30 X 70)

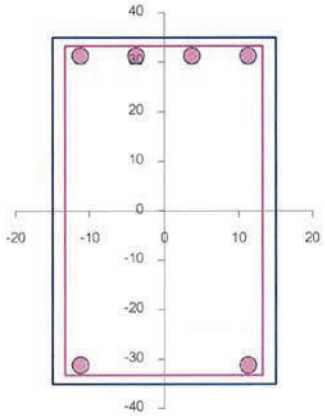

4 DB 25

Stirrup RB 9
@ 0.100

2 DB 25

Negative Section

4B-3C (30 X 70)

KINGDOM OF THAILAND
CHOKCHAI KHATKHAJORN
โชคชัย ขัดขจร
สย. 4522
REGISTERED PROFESSIONAL ENGINEER

DYNAMIC ENGINEERING CONSULTANT CO., LTD.

RC-I EXCEL — **Ultimate Stress Design method in accordance with ACI 318-89**

Design Reinforced Concrete Beam

Project	อาคารทิศตะวันออก โซน ซี	**Beam Code**	4B-9
Engineer	CKJ	**File Name**	Beam
		Date	13 Aug 20

	fc'	=	350	[kg/cm^2]
	fy SD	=	4000	[kg/cm^2]
	fy SD	=	4000	[kg/cm^2]
$M_{+pos.}$	Mu^+	=	108465	[kg-m]
$M_{-neg.}$	Mu^-	=	60000	[kg-m]
$V_{max.}$	Vu	=	54621	[kg]
	DL	=	5230	[kg/m]
	LL	=	3910	[kg/m]
Length	Ln	=	760	[cm]
width	b	=	30	[cm]
depth	t	=	90	[cm]
	d'	=	5	[cm]
siding	d"	=	3.5	[cm]

For Positive Moment :

Upper Steel	DB28
Lower Steel	DB28
Stirrup Steel	DB12

d	=	85	[cm]
a try	=	17.7367	[cm]
As	=	39.575	[cm^2]
a	=	**17.7367**	[cm]
ϕ Bend	=	0.90	
ϕ Shea	=	0.85	
k1	=	0.80	
Es	=	2040000	[kg/cm^2]
Ec	=	284553	[kg/cm^2]
n	=	7	
ρ	=	0.0360	
ρ_{max}	=	0.0270	
As	=	68.803	[cm^2]
a	=	30.836	[cm]
Mu	=	172347	[kg-m]
M1	=	0	[kg-m]
As'	=	0.0000	[cm^2]
No. of steel	=	**2**	
As	=	12.32	[cm^2]
Σ As	=	39.575	[cm^2]
No. of steel	=	**7**	
As	=	43.10	[cm^2]

Section OK

Stirrup Design

$0.53\,\phi\,(fc')^{0.5}\,bd$	=	22756	[kg]
L=Ln/2(Vu - ϕ Vc)/Vu	=	245.4	[cm]
S	=	41.029	[cm]

Used Stirrup 2 | DB12 @ 0.400 | OK

For Negative Moment :

Upper Steel	DB28
Lower Steel	DB28
Stirrup Steel	DB12

d	=	85	[cm]
a try	=	8.7110	[cm]
As	=	20.667	[cm^2]
a	=	**9.2624**	[cm]
ϕ Bend	=	0.90	
ϕ Shea	=	0.85	
k1	=	1.05	
Es	=	2040000	[kg/cm^2]
Ec	=	284553	[kg/cm^2]
n	=	7	
ρ	=	0.0472	
ρ_{max}	=	0.0354	
As	=	90.303	[cm^2]
a	=	40.472	[cm]
Mu	=	210543	[kg-m]
M1	=	0	[kg-m]
As'	=	0.0000	[cm^2]
No. of steel	=	**2**	
As	=	12.32	[cm^2]
Σ As	=	20.667	[cm^2]
No. of steel	=	**4**	
As	=	24.63	[cm^2]

Section OK

Check Deflection

Δ all	=	2.11	[cm]		
ρ fy	=	68	>	35	[kg/cm^2]
Y'	=	32.5			
I	=	1174893	[cm^4]		
Ec	=	284116	[kg/cm^2]		
Δ	=	1.19	[cm] <	Δ all	OK
Δ Time	=	1.77	<	Δ all	OK

KINGDOM OF THAILAND
CHOKCHAI KHATKHAJORN
โชคชัย ขัดขจร
สย. 4522
REGISTERED PROFESSIONAL ENGINEER

DYNAMIC ENGINEERING CONSULTANT CO., LTD.

RC-I EXCEL — **Ultimate Stress Design method in accordance with ACI 318-89**

Design Reinforced Concrete Beam

Project	อาคารทิศตะวันออก โซน ซี	Beam Code	4B-9
Engineer	CKJ	File Name	Beam
		Date	13 Aug 20

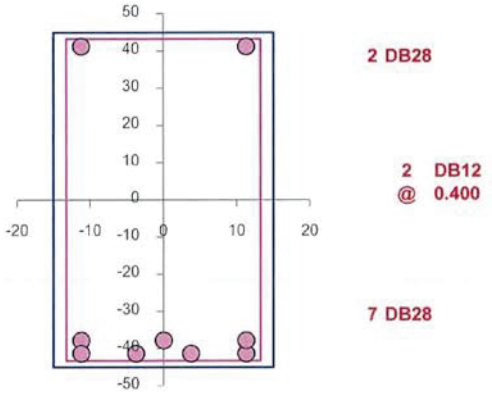

Positive Section
4B-9 (30 X 90)

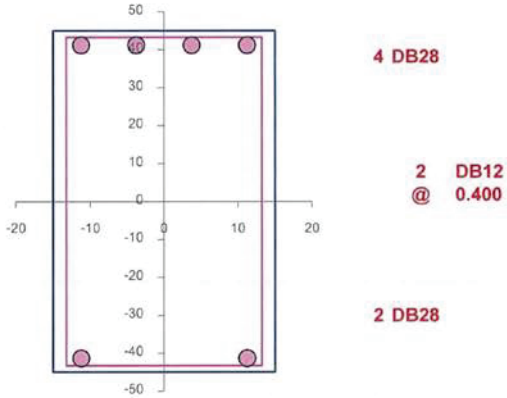

Negative Section
4B-9 (30 X 90)

KINGDOM OF THAILAND
CHOKCHAI KHATKHAJORN
โชคชัย ขัดขจร
สย. 4522
REGISTERED PROFESSIONAL ENGINEER

DYNAMIC ENGINEERING CONSULTANT CO., LTD.

RC-I EXCEL — **Ultimate Stress Design method in accordance with ACI 318-89**

Design Reinforced Concrete Beam

Project	อาคารทิศตะวันออก โซน ซี	**Beam Code**	4B-9A
Engineer	CKJ	**File Name**	Beam
		Date	13 Aug 20

	fc'	=	350	[kg/cm²]
	fy SD	=	4000	[kg/cm²]
	fy SD	=	4000	[kg/cm²]
$M_{+pos.}$	Mu⁺	=	64380	[kg-m]
$M_{-neg.}$	Mu⁻	=	80475	[kg-m]
$V_{max.}$	Vu	=	79450	[kg]
	DL	=	5260	[kg/m]
	LL	=	4080	[kg/m]
Length	Ln	=	760	[cm]
width	b	=	40	[cm]
depth	t	=	90	[cm]
	d'	=	5	[cm]
siding	d"	=	3.5	[cm]

For Positive Moment :

Upper Steel	DB28
Lower Steel	DB28
Stirrup Steel	DB12

d	=	85	[cm]
a try	=	7.3935	[cm]
As	=	21.996	[cm²]
a	=	**7.3936**	[cm]
ϕ Bend	=	0.90	
ϕ Shea	=	0.85	
k1	=	0.80	
Es	=	2040000	[kg/cm²]
Ec	=	284553	[kg/cm²]
n	=	7	
ρ	=	0.0360	
ρ_{max}	=	0.0270	
As	=	91.737	[cm²]
a	=	30.836	[cm]
Mu	=	229797	[kg-m]
M1	=	0	[kg-m]
As'	=	0.0000	[cm²]
No. of steel	=	**2**	
As	=	12.32	[cm²]
Σ As	=	21.996	[cm²]
No. of steel	=	**4**	
As	=	24.63	[cm²]

Section OK

For Negative Moment :

Upper Steel	DB28
Lower Steel	DB28
Stirrup Steel	DB12

d	=	85	[cm]
a try	=	8.7110	[cm]
As	=	27.719	[cm²]
a	=	**9.3174**	[cm]
ϕ Bend	=	0.90	
ϕ Shea	=	0.85	
k1	=	1.05	
Es	=	2040000	[kg/cm²]
Ec	=	284553	[kg/cm²]
n	=	7	
ρ	=	0.0472	
ρ_{max}	=	0.0354	
As	=	120.405	[cm²]
a	=	40.472	[cm]
Mu	=	280724	[kg-m]
M1	=	0	[kg-m]
As'	=	0.0000	[cm²]
No. of steel	=	**2**	
As	=	12.32	[cm²]
Σ As	=	27.719	[cm²]
No. of steel	=	**5**	
As	=	30.79	[cm²]

Section OK

Stirrup Design

$0.53\ \phi\ (fc')^{0.5}$ bd	=	30341	[kg]	
L=Ln/2(Vu - ϕ Vc)/Vu	=	256.6	[cm]	
S	=	26.623	[cm]	
Used Stirrup	2	DB12 @ 0.250		OK

Check Deflection

Δ all	=	2.11	[cm]		
ρ fy	=	29	<	35	[kg/cm²]
Y'	=	23.1			
I	=	2047083	[cm⁴]		
Ec	=	284116	[kg/cm²]		
Δ	=	0.70	[cm] <	Δ all	OK
Δ Time	=	0.41	<	Δ all	OK

KINGDOM OF THAILAND
CHOKCHAI KHATKHAJORN
โชคชัย ขัดขจร
สย. 4522
REGISTERED PROFESSIONAL ENGINEER

DYNAMIC ENGINEERING CONSULTANT CO., LTD.

RC-I EXCEL — **Ultimate Stress Design method in accordance with ACI 318-89**

Design Reinforced Concrete Beam

Project	อาคารทิศตะวันออก โซน ซี	**Beam Code**	4B-9A
Engineer	CKJ	**File Name**	Beam
		Date	13 Aug 20

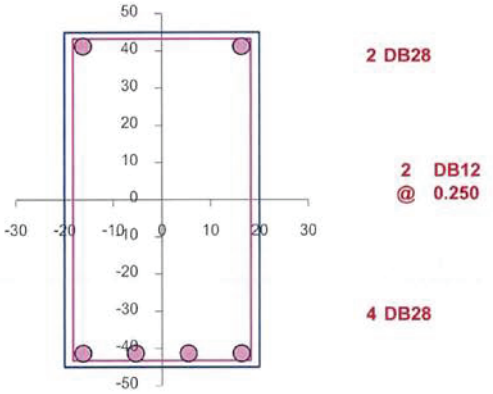

Positive Section

4B-9A (40 X 90)

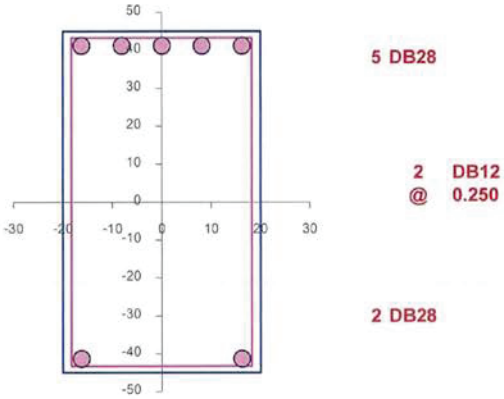

Negative Section

4B-9A (40 X 90)

KINGDOM OF THAILAND
CHOKCHAI KHATKHAJORN
โชคชัย ขัดขจร
สย. 4522
REGISTERED PROFESSIONAL ENGINEER

DYNAMIC ENGINEERING CONSULTANT CO., LTD.

RC-I EXCEL — **Ultimate Stress Design method in accordance with ACI 318-89**

Design Reinforced Concrete Beam

Project	อาคารทิศตะวันออก โซน ซี	**Beam Code**	4B-13
Engineer	CKJ	**File Name**	Beam
		Date	4 Aug 20

	fc'	=	350	[kg/cm²]
	fy SD	=	4000	[kg/cm²]
	fy SD	=	4000	[kg/cm²]
$M_{-pos.}$	Mu^{+}	=	93377	[kg-m]
$M_{-neg.}$	Mu^{-}	=	60000	[kg-m]
$V_{max.}$	Vu	=	56818	[kg]
	DL	=	5310	[kg/m]
	LL	=	3740	[kg/m]
Length	Ln	=	700	[cm]
width	b	=	30	[cm]
depth	t	=	80	[cm]
	d'	=	5	[cm]
siding	d"	=	3.5	[cm]

For Positive Moment :

Upper Steel	DB28
Lower Steel	DB28
Stirrup Steel	DB12

d	=	75	[cm]
a try	=	17.5542	[cm]
As	=	39.168	[cm²]
a	=	**17.5542**	[cm]
ϕ Bend	=	0.90	
ϕ Shea	=	0.85	
k1	=	0.80	
Es	=	2040000	[kg/cm²]
Ec	=	284553	[kg/cm²]
n	=	7	
ρ	=	0.0360	
ρ_{max}	=	0.0270	
As	=	60.708	[cm²]
a	=	27.208	[cm]
Mu	=	134181	[kg-m]
M1	=	0	[kg-m]
As'	=	0.0000	[cm²]
No. of steel	=	**2**	
As	=	12.32	[cm²]
Σ As	=	39.168	[cm²]
No. of steel	=	**7**	
As	=	43.10	[cm²]

Section OK

For Negative Moment :

Upper Steel	DB28
Lower Steel	DB28
Stirrup Steel	DB12

d	=	75	[cm]
a try	=	8.7110	[cm]
As	=	23.592	[cm²]
a	=	**10.5736**	[cm]
ϕ Bend	=	0.90	
ϕ Shea	=	0.85	
k1	=	1.05	
Es	=	2040000	[kg/cm²]
Ec	=	284553	[kg/cm²]
n	=	7	
ρ	=	0.0472	
ρ_{max}	=	0.0354	
As	=	79.680	[cm²]
a	=	35.711	[cm]
Mu	=	163917	[kg-m]
M1	=	0	[kg-m]
As'	=	0.0000	[cm²]
No. of steel	=	**2**	
As	=	12.32	[cm²]
Σ As	=	23.592	[cm²]
No. of steel	=	**4**	
As	=	24.63	[cm²]

Section OK

Stirrup Design

$0.53\,\phi\,(fc')^{0.5}\,bd$	=	20079	[kg]	
L=Ln/2(Vu - ϕ Vc)/Vu	=	244.9	[cm]	
S	=	31.399	[cm]	
Used Stirrup	2	DB12 @ 0.300		OK

Check Deflection

Δ all	=	1.94 [cm]		
ρ fy	=	77	>	35 [kg/cm²]
Y'	=	30.1		
I	=	880975	[cm⁴]	
Ec	=	284116	[kg/cm²]	
Δ	=	1.13 [cm]	<	Δ all **OK**
Δ Time	=	1.7	<	Δ all **OK**

KINGDOM OF THAILAND
CHOKCHAI KHATKHAJORN
โชคชัย ขัดขจร
สบ. 4522
REGISTERED PROFESSIONAL ENGINEER

DYNAMIC ENGINEERING CONSULTANT CO., LTD.

RC-I EXCEL — **Ultimate Stress Design method in accordance with ACI 318-89**

Design Reinforced Concrete Beam

Project	อาคารทิศตะวันออก โซน ซี	Beam Code	4B-13
Engineer	CKJ	File Name	Beam
		Date	4 Aug 20

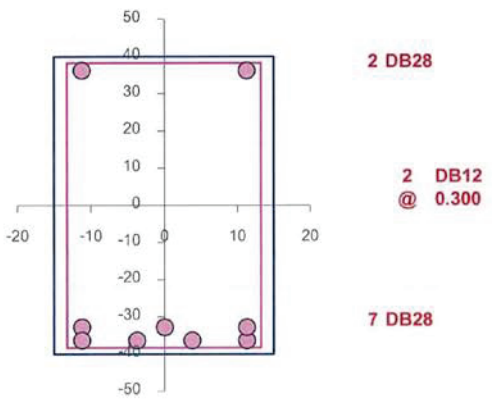

Positive Section
4B-13 (30 X 80)

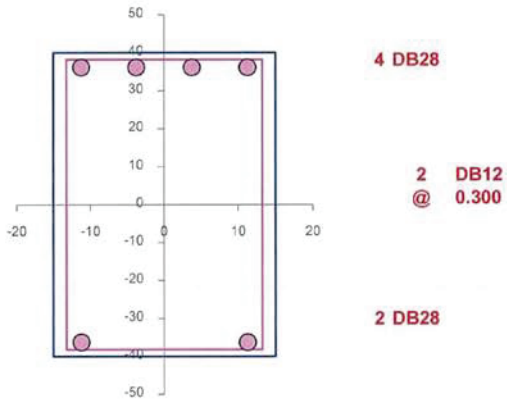

Negative Section
4B-13 (30 X 80)

KINGDOM OF THAILAND
CHOKCHAI KHATKHAJORN
โชคชัย ขัดขจร
สย. 4522
REGISTERED PROFESSIONAL ENGINEER

DYNAMIC ENGINEERING CONSULTANT CO., LTD.

RC-I EXCEL — **Ultimate Stress Design method in accordance with ACI 318-89**

Design Reinforced Concrete Beam

Project	อาคารทิศตะวันออก โซน ซี	**Beam Code**	4B-13A
Engineer	CKJ	**File Name**	Beam
		Date	4 Aug 20

	fc'	=	350	[kg/cm^2]
	fy SD	=	4000	[kg/cm^2]
	fy SD	=	4000	[kg/cm^2]
$M_{-pos.}$	Mu^+	=	108375	[kg-m]
$M_{-neg.}$	Mu^-	=	60000	[kg-m]
$V_{max.}$	Vu	=	65314	[kg]
	DL	=	5310	[kg/m]
	LL	=	3740	[kg/m]
Length	Ln	=	700	[cm]
width	b	=	30	[cm]
depth	t	=	80	[cm]
	d'	=	5	[cm]
siding	d"	=	3.5	[cm]

For Positive Moment :

Upper Steel	DB28
Lower Steel	DB28
Stirrup Steel	DB12

	d	=	75	[cm]
	a try	=	20.9020	[cm]
	As	=	46.638	[cm^2]
	a	=	**20.9020**	[cm]
	ϕ Bend	=	0.90	
	ϕ Shea	=	0.85	
	k1	=	0.80	
	Es	=	2040000	[kg/cm^2]
	Ec	=	284553	[kg/cm^2]
	n	=	7	
	ρ	=	0.0360	
	ρ_{max}	=	0.0270	
	As	=	60.708	[cm^2]
	a	=	27.208	[cm]
	Mu	=	134181	[kg-m]
	M1	=	0	[kg-m]
	As'	=	0.0000	[cm^2]
No. of steel		=	**2**	
	As	=	12.32	[cm^2]
	Σ As	=	46.638	[cm^2]
No. of steel		=	**8**	
	As	=	49.26	[cm^2]

Section OK

Stirrup Design

$0.53\,\phi\,(fc')^{0.5}\,bd$	=	20079	[kg]
L=Ln/2(Vu - ϕ Vc)/Vu	=	258.5	[cm]
S	=	18.750	[cm]

Used Stirrup 2 DB12 @ 0.175 OK

For Negative Moment :

Upper Steel	DB28
Lower Steel	DB28
Stirrup Steel	DB12

	d	=	75	[cm]
	a try	=	8.7110	[cm]
	As	=	23.592	[cm^2]
	a	=	**10.5736**	[cm]
	ϕ Bend	=	0.90	
	ϕ Shea	=	0.85	
	k1	=	1.05	
	Es	=	2040000	[kg/cm^2]
	Ec	=	284553	[kg/cm^2]
	n	=	7	
	ρ	=	0.0472	
	ρ_{max}	=	0.0354	
	As	=	79.680	[cm^2]
	a	=	35.711	[cm]
	Mu	=	163917	[kg-m]
	M1	=	0	[kg-m]
	As'	=	0.0000	[cm^2]
No. of steel		=	**2**	
	As	=	12.32	[cm^2]
	Σ As	=	23.592	[cm^2]
No. of steel		=	**4**	
	As	=	24.63	[cm^2]

Section OK

Check Deflection

Δ all	=	1.94 [cm]			
ρ fy	=	88	>	35	[kg/cm^2]
Y'	=	31.6			
I	=	965036	[cm^4]		
Ec	=	284116	[kg/cm^2]		
Δ	=	1.03 [cm]	<	Δ all	OK
Δ Time	=	1.55	<	Δ all	OK

KINGDOM OF THAILAND
CHOKCHAI KHATKHAJORN
โชคชัย ขัดขจร
สย. 4522
REGISTERED PROFESSIONAL ENGINEER

DYNAMIC ENGINEERING CONSULTANT CO., LTD.

RC-I EXCEL — **Ultimate Stress Design method in accordance with ACI 318-89**

Design Reinforced Concrete Beam

Project	อาคารทิศตะวันออก โซน ซี	Beam Code	4B-13A
Engineer	CKJ	File Name	Beam
		Date	4 Aug 20

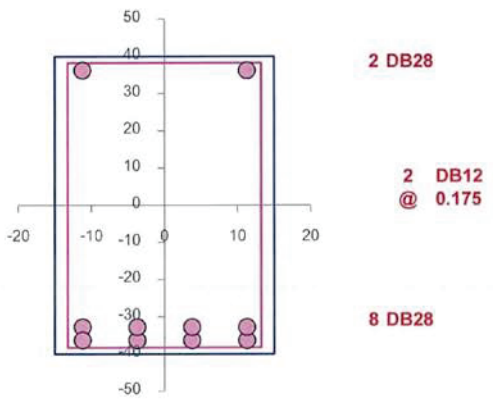

Positive Section
4B-13A (30 X 80)

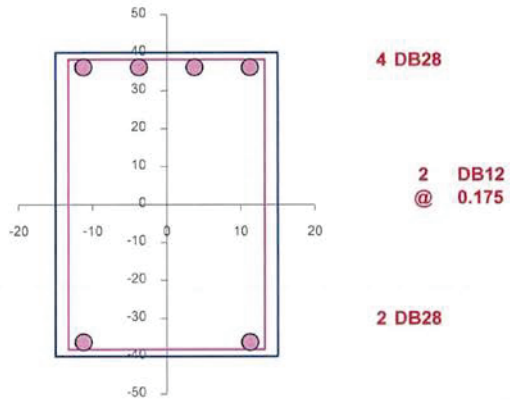

Negative Section
4B-13A (30 X 80)

KINGDOM OF THAILAND
CHOKCHAI KHATKHAJORN
โชคชัย ขัดขจร
สย. 4522
REGISTERED PROFESSIONAL ENGINEER

DYNAMIC ENGINEERING CONSULTANT CO., LTD.		Job No.	193018
Design Reinforced Concrete Beam		Rev.	1
(Ultimate Stress Design method in accordance with ACI 318-89)		Initial	CKJ
Beam No.	4B-13B	Date	13-Aug-20
Project :	อาคารทิศตะวันออก	File	Beam B

	fc'	=	350	[kg/cm^2]
	fy SD	=	4000	[kg/cm^2]
	fy SR	=	2400	[kg/cm^2]
$M_{-pos.}$	Mu^+	=	24605	[kg-m]
$M_{-neg.}$	Mu^-	=	24605	[kg-m]
$V_{max.}$	Vu	=	27250	[kg]
	DL	=	5010	[kg/m]
	LL	=	3740	[kg/m]
Length	Ln	=	400	[cm]
width	b	=	30	[cm]
depth	t	=	50	[cm]
	d'	=	5	[cm]
siding	d''	=	3.5	[cm]

For Positive Moment :

Upper Steel	DB 25
Lower Steel	DB 25
Stirrup Steel	RB 9

d	=	45	[cm]
a try	=	7.4183	[cm]
As	=	16.553	[cm^2]
a	=	**7.4185**	[cm]
ϕ Bend	=	0.90	
ϕ Shea	=	0.85	
k1	=	0.80	
Es	=	2040000	[kg/cm^2]
Ec	=	284553	[kg/cm^2]
n	=	7	
ρ	=	0.0360	
ρ_{max}	=	0.0270	
As	=	36.425	[cm^2]
a	=	16.325	[cm]
Mu	=	48305	[kg-m]
M1	=	0	[kg-m]
As'	=	0.0000	[cm^2]
No. of steel	=	**2**	
As	=	9.82	[cm^2]
Σ As	=	16.553	[cm^2]
No. of steel	=	**4**	
As	=	19.63	[cm^2]

Section OK

Stirrup Design

$0.53\ \phi\ (fc')^{0.5}\ bd$	=	12047	[kg]
L=Ln/2(Vu - ϕ Vc)/Vu	=	124.8	[cm]
S	=	7.683	[cm]
Used Stirrup		**RB 9 @ 0.075**	**OK**

For Negative Moment :

Upper Steel	DB 25
Lower Steel	DB 25
Stirrup Steel	RB 9

d	=	45	[cm]
a try	=	8.7110	[cm]
As	=	16.553	[cm^2]
a	=	**7.4185**	[cm]
ϕ Bend	=	0.90	
ϕ Shea	=	0.85	
k1	=	1.05	
Es	=	2040000	[kg/cm^2]
Ec	=	284553	[kg/cm^2]
n	=	7	
ρ	=	0.0472	
ρ_{max}	=	0.0354	
As	=	47.808	[cm^2]
a	=	21.426	[cm]
Mu	=	59010	[kg-m]
M1	=	0	[kg-m]
As'	=	0.0000	[cm^2]
No. of steel	=	**2**	
As	=	9.82	[cm^2]
Σ As	=	16.553	[cm^2]
No. of steel	=	**4**	
As	=	19.63	[cm^2]

Section OK

Check Deflection

Δ all	=	1.11	[cm]		
ρ fy	=	58	>	35	[kg/cm^2]
Y'	=	16.2			
I	=	156517	[cm^4]		
Ec	=	284116	[kg/cm^2]		
Δ	=	0.66	[cm] <	Δ all	**OK**
Δ Time	=	0.39	<	Δ all	**OK**

KINGDOM OF THAILAND
CHOKCHAI KHATKHAJORN
โชคชัย ขัดขจร
สย. 4522
REGISTERED PROFESSIONAL ENGINEER

DYNAMIC ENGINEERING CONSULTANT CO., LTD.		Job No.	193018
Design Reinforced Concrete Beam		Rev.	1
(Ultimate Stress Design method in accordance with ACI 318-89)		Initial	CKJ
Beam No.	4B-13B	Date	13-Aug-20
Project :	อาคารทิศตะวันออก	File	Beam B

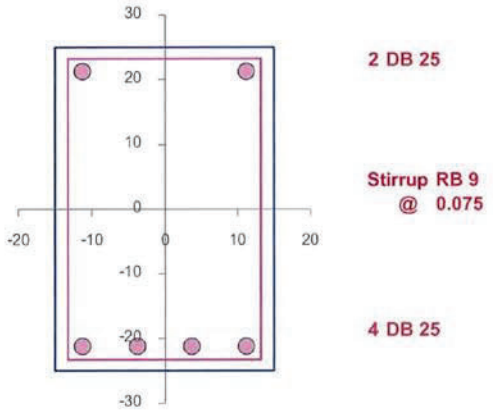

Positive Section

4B-13B (30 X 50)

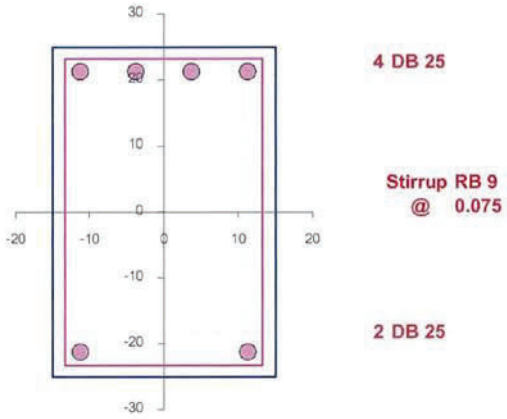

Negative Section

4B-13B (30 X 50)

KINGDOM OF THAILAND
CHOKCHAI KHATKHAJORN
โชคชัย ขัดขจร
สย. 4522
REGISTERED PROFESSIONAL ENGINEER

DYNAMIC ENGINEERING CONSULTANT CO., LTD.

RC-I EXCEL — **Ultimate Stress Design method in accordance with ACI 318-89**

Design Reinforced Concrete Beam

Project	อาคารทิศตะวันออก โซน ซี	**Beam Code**	4B-15
Engineer	CKJ	**File Name**	Beam
		Date	4 Aug 20

	fc'	=	350	[kg/cm²]
	fy SD	=	4000	[kg/cm²]
	fy SD	=	4000	[kg/cm²]
$M_{-pos.}$	Mu^{+}	=	94610	[kg-m]
$M_{-neg.}$	Mu^{-}	=	78467	[kg-m]
$V_{max.}$	Vu	=	80345	[kg]
	DL	=	5035	[kg/m]
	LL	=	3740	[kg/m]
Length	Ln	=	700	[cm]
width	b	=	30	[cm]
depth	t	=	80	[cm]
	d'	=	5	[cm]
siding	d"	=	3.5	[cm]

For Positive Moment :

Upper Steel	DB28
Lower Steel	DB28
Stirrup Steel	DB12

d	=	75	[cm]
a try	=	17.8220	[cm]
As	=	39.765	[cm²]
a	=	**17.8220**	[cm]
ϕ Bend	=	0.90	
ϕ Shea	=	0.85	
k1	=	0.80	
Es	=	2040000	[kg/cm²]
Ec	=	284553	[kg/cm²]
n	=	7	
ρ	=	0.0360	
ρ_{max}	=	0.0270	
As	=	60.708	[cm²]
a	=	27.208	[cm]
Mu	=	134181	[kg-m]
M1	=	0	[kg-m]
As'	=	0.0000	[cm²]
No. of steel	=	**2**	
As	=	12.32	[cm²]
Σ As	=	39.765	[cm²]
No. of steel	=	**7**	
As	=	43.10	[cm²]

Section OK

For Negative Moment :

Upper Steel	DB28
Lower Steel	DB28
Stirrup Steel	DB12

d	=	75	[cm]
a try	=	8.7110	[cm]
As	=	30.854	[cm²]
a	=	**13.8280**	[cm]
ϕ Bend	=	0.90	
ϕ Shea	=	0.85	
k1	=	1.05	
Es	=	2040000	[kg/cm²]
Ec	=	284553	[kg/cm²]
n	=	7	
ρ	=	0.0472	
ρ_{max}	=	0.0354	
As	=	79.680	[cm²]
a	=	35.711	[cm]
Mu	=	163917	[kg-m]
M1	=	0	[kg-m]
As'	=	0.0000	[cm²]
No. of steel	=	**2**	
As	=	12.32	[cm²]
Σ As	=	30.854	[cm²]
No. of steel	=	**6**	
As	=	36.95	[cm²]

Section OK

Stirrup Design

$0.53\ \phi\ (fc')^{0.5}\ bd$	=	20079	[kg]	
L=Ln/2(Vu - ϕ Vc)/Vu	=	275.7	[cm]	
S	=	18.750	[cm]	
Used Stirrup	2	DB12 @ 0.175		OK

Check Deflection

Δ all	=	1.94	[cm]	
ρ fy	=	77 >	35	[kg/cm²]
Y'	=	30.1		
I	=	880975	[cm⁴]	
Ec	=	284116	[kg/cm²]	
Δ	=	1.10 [cm]	<	Δ all **OK**
Δ Time	=	1.63	<	Δ all **OK**

KINGDOM OF THAILAND
CHOKCHAI KHATKHAJORN
โชคชัย ขัดขจร
สย. 4522
REGISTERED PROFESSIONAL ENGINEER

DYNAMIC ENGINEERING CONSULTANT CO., LTD.

RC-I EXCEL — **Ultimate Stress Design method in accordance with ACI 318-89**

Design Reinforced Concrete Beam

Project	อาคารทิศตะวันออก โซน ซี	Beam Code	4B-15
Engineer	CKJ	File Name	Beam
		Date	4 Aug 20

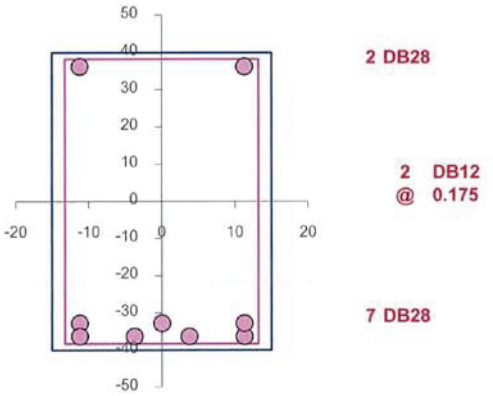

Positive Section
4B-15 (30 X 80)

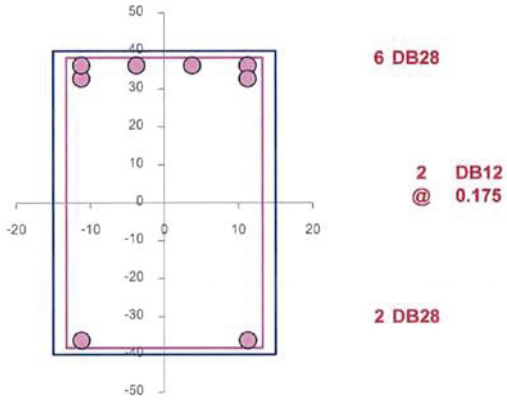

Negative Section
4B-15 (30 X 80)

KINGDOM OF THAILAND
CHOKCHAI KHATKHAJORN
โชคชัย ขัดขจร
สย. 4522
REGISTERED PROFESSIONAL ENGINEER

DYNAMIC ENGINEERING CONSULTANT CO., LTD.

RC-I EXCEL — **Ultimate Stress Design method in accordance with ACI 318-89**

Design Reinforced Concrete Beam

Project	อาคารทิศตะวันออก โซน ซี	**Beam Code**	4B-15A
Engineer	CKJ	**File Name**	Beam
		Date	13 Aug 20

	fc'	=	350	[kg/cm^2]
	fy SD	=	4000	[kg/cm^2]
	fy SD	=	4000	[kg/cm^2]
$M_{-pos.}$	Mu^+	=	55117	[kg-m]
$M_{-neg.}$	Mu^-	=	55117	[kg-m]
$V_{max.}$	Vu	=	37505	[kg]
	DL	=	5085	[kg/m]
	LL	=	4080	[kg/m]
Length	Ln	=	600	[cm]
width	b	=	30	[cm]
depth	t	=	70	[cm]
	d'	=	5	[cm]
siding	d"	=	3.5	[cm]

For Positive Moment :

Upper Steel: DB28
Lower Steel: DB28
Stirrup Steel: DB12

d	=	65	[cm]
a try	=	11.5898	[cm]
As	=	25.860	[cm^2]
a	=	**11.5898**	[cm]
ϕ Bend	=	0.90	
ϕ Shea	=	0.85	
k1	=	0.80	
Es	=	2040000	[kg/cm^2]
Ec	=	284553	[kg/cm^2]
n	=	7	
ρ	=	0.0360	
ρ_{max}	=	0.0270	
As	=	52.614	[cm^2]
a	=	23.580	[cm]
Mu	=	100784	[kg-m]
M1	=	0	[kg-m]
As'	=	0.0000	[cm^2]
No. of steel	=	**2**	
As	=	12.32	[cm^2]
Σ As	=	25.860	[cm^2]
No. of steel	=	**5**	
As	=	30.79	[cm^2]

Section OK

For Negative Moment :

Upper Steel: DB28
Lower Steel: DB28
Stirrup Steel: DB12

d	=	65	[cm]
a try	=	8.7110	[cm]
As	=	25.246	[cm^2]
a	=	**11.3147**	[cm]
ϕ Bend	=	0.90	
ϕ Shea	=	0.85	
k1	=	1.05	
Es	=	2040000	[kg/cm^2]
Ec	=	284553	[kg/cm^2]
n	=	7	
ρ	=	0.0472	
ρ_{max}	=	0.0354	
As	=	69.056	[cm^2]
a	=	30.949	[cm]
Mu	=	123120	[kg-m]
M1	=	0	[kg-m]
As'	=	0.0000	[cm^2]
No. of steel	=	**2**	
As	=	12.32	[cm^2]
Σ As	=	25.246	[cm^2]
No. of steel	=	**5**	
As	=	30.79	[cm^2]

Section OK

Stirrup Design

$0.53\,\phi\,(fc')^{0.5}\,bd$	=	17402	[kg]
L=Ln/2(Vu - ϕ Vc)/Vu	=	181.7	[cm]
S	=	32.500	[cm]

Used Stirrup 2 DB12 @ 0.300 **OK**

Check Deflection

Δ all	=	1.67	[cm]	
ρ fy	=	63	> 35	[kg/cm^2]
Y'	=	24.2		
I	=	500477	[cm^4]	
Ec	=	284116	[kg/cm^2]	
Δ	=	1.09	[cm] <	Δ all **OK**
Δ Time	=	1.59	<	Δ all **OK**

KINGDOM OF THAILAND
CHOKCHAI KHATKHAJORN
โชคชัย ขัดขจร
สย. 4522
REGISTERED PROFESSIONAL ENGINEER

DYNAMIC ENGINEERING CONSULTANT CO., LTD.

RC-I EXCEL		Ultimate Stress Design method in accordance with ACI 318-89	
Design Reinforced Concrete Beam		Beam Code	4B-15A
Project	อาคารทิศตะวันออก โซน ซี	File Name	Beam
Engineer	CKJ	Date	13 Aug 20

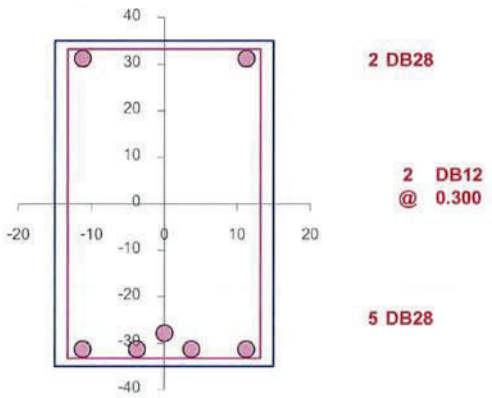

Positive Section
4B-15A (30 X 70)

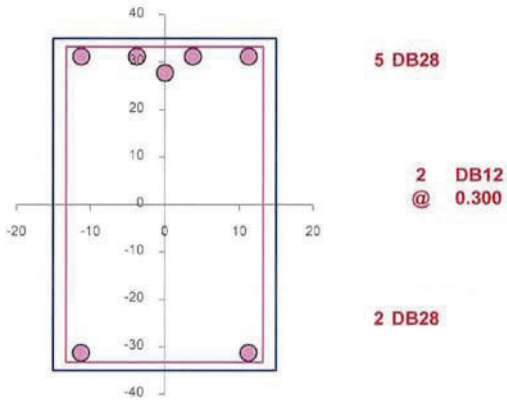

Negative Section
4B-15A (30 X 70)

KINGDOM OF THAILAND
CHOKCHAI KHATKHAJORN
โชคชัย ขัดขจร
สย. 4522
REGISTERED PROFESSIONAL ENGINEER

DYNAMIC ENGINEERING CONSULTANT CO., LTD.

RC-I EXCEL — Ultimate Stress Design method in accordance with ACI 318-89

Design Reinforced Concrete Beam

Project	อาคารทิศตะวันออก โซน ซี	Beam Code	BC-1
Engineer	CKJ	File Name	Beam
		Date	4 Aug 20

	fc'	=	350	[kg/cm²]
	fy SD	=	4000	[kg/cm²]
	fy SD	=	4000	[kg/cm²]
$M_{-pos.}$	Mu^+	=	31464	[kg-m]
$M_{-neg.}$	Mu^-	=	52440	[kg-m]
$V_{max.}$	Vu	=	40416	[kg]
	DL	=	12240	[kg/m]
	LL	=	4080	[kg/m]
Length	Ln	=	230	[cm]
width	b	=	100	[cm]
depth	t	=	65	[cm]
	d'	=	5	[cm]
siding	d"	=	3.5	[cm]

For Positive Moment :

Upper Steel: DB25
Lower Steel: DB25
Stirrup Steel: DB12

d	=	60	[cm]
a try	=	1.9916	[cm]
As	=	14.812	[cm²]
a	=	**1.9916**	[cm]
ϕ Bend	=	0.90	
ϕ Shea	=	0.85	
k1	=	0.80	
Es	=	2040000	[kg/cm²]
Ec	=	284553	[kg/cm²]
n	=	7	
ρ	=	0.0360	
ρ_{max}	=	0.0270	
As	=	161.889	[cm²]
a	=	21.767	[cm]
Mu	=	286252	[kg-m]
M1	=	0	[kg-m]
As'	=	0.0000	[cm²]
No. of steel	=	**2**	
As	=	9.82	[cm²]
Σ As	=	14.812	[cm²]
No. of steel	=	**4**	
As	=	19.63	[cm²]

Section OK

For Negative Moment :

Upper Steel: DB25
Lower Steel: DB25
Stirrup Steel: DB12

d	=	60	[cm]
a try	=	8.7110	[cm]
As	=	26.178	[cm²]
a	=	**3.5197**	[cm]
ϕ Bend	=	0.90	
ϕ Shea	=	0.85	
k1	=	1.05	
Es	=	2040000	[kg/cm²]
Ec	=	284553	[kg/cm²]
n	=	7	
ρ	=	0.0472	
ρ_{max}	=	0.0354	
As	=	212.479	[cm²]
a	=	28.569	[cm]
Mu	=	349690	[kg-m]
M1	=	0	[kg-m]
As'	=	0.0000	[cm²]
No. of steel	=	**2**	
As	=	9.82	[cm²]
Σ As	=	26.178	[cm²]
No. of steel	=	**6**	
As	=	29.45	[cm²]

Section OK

Stirrup Design

0.53 ϕ (fc')^0.5 bd	=	53543	[kg]
L=Ln/2(Vu - ϕ Vc)/Vu	=	-14.5	[cm]
S	=	-70.303	[cm]

Used Stirrup 2 DB12 @ #N/A — #N/A

Check Deflection

Δ all	=	0.64 [cm]			
ρ fy	=	13	<	35	[kg/cm²]
Y'	=	11.5			
I	=	1800000	[cm⁴]		
Ec	=	284116	[kg/cm²]		
Δ	=	0.01 [cm]	<	Δ all	OK
Δ Time	=	0.01	<	Δ all	OK

KINGDOM OF THAILAND — CHOKCHAI KHATKHAJORN — โชคชัย ขัดขจร — สย. 4522 — REGISTERED PROFESSIONAL ENGINEER

DYNAMIC ENGINEERING CONSULTANT CO., LTD.

RC-I EXCEL — Ultimate Stress Design method in accordance with ACI 318-89

Design Reinforced Concrete Beam

Project	อาคารทิศตะวันออก โซน ซี	Beam Code	BC-1
Engineer	CKJ	File Name	Beam
		Date	4 Aug 20

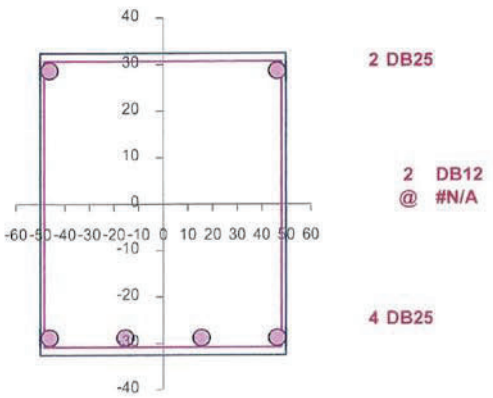

Positive Section
BC-1 (100 X 65)

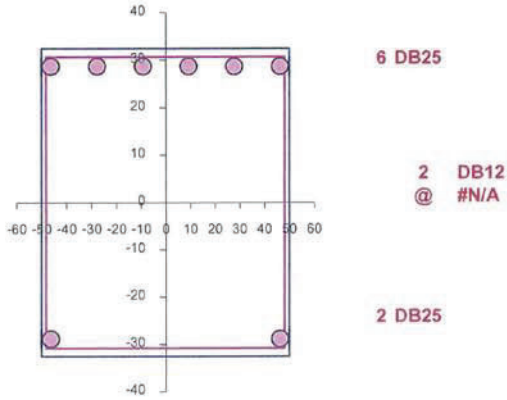

Negative Section
BC-1 (100 X 65)

KINGDOM OF THAILAND
CHOKCHAI KHATKHAJORN
โชคชัย ขัดขจร
สย. 4522
REGISTERED PROFESSIONAL ENGINEER

DYNAMIC ENGINEERING CONSULTANT CO., LTD.

RC-I EXCEL — Ultimate Stress Design method in accordance with ACI 318-89

Design Reinforced Concrete Beam

Project	อาคารทิศตะวันออก โซน ซี	Beam Code	BC-2
Engineer	CKJ	File Name	Beam
		Date	4 Aug 20

	fc'	=	350	[kg/cm²]
	fy SD	=	4000	[kg/cm²]
	fy SD	=	4000	[kg/cm²]
$M_{pos.}$	Mu^+	=	40180	[kg-m]
$M_{neg.}$	Mu^-	=	80360	[kg-m]
$V_{max.}$	Vu	=	66440	[kg]
	DL	=	13790	[kg/m]
	LL	=	13600	[kg/m]
Length	Ln	=	230	[cm]
width	b	=	100	[cm]
depth	t	=	70	[cm]
	d'	=	5	[cm]
siding	d"	=	3.5	[cm]

For Positive Moment :

Upper Steel	DB25
Lower Steel	DB25
Stirrup Steel	DB12

d	=	65	[cm]
a try	=	2.3512	[cm]
As	=	17.487	[cm²]
a	=	**2.3512**	[cm]
ϕ Bend	=	0.90	
ϕ Shea	=	0.85	
k1	=	0.80	
Es	=	2040000	[kg/cm²]
Ec	=	284553	[kg/cm²]
n	=	7	
ρ	=	0.0360	
ρ_{max}	=	0.0270	
As	=	175.379	[cm²]
a	=	23.580	[cm]
Mu	=	335948	[kg-m]
M1	=	0	[kg-m]
As'	=	0.0000	[cm²]
No. of steel	=	2	
As	=	9.82	[cm²]
Σ As	=	17.487	[cm²]
No. of steel	=	4	
As	=	19.63	[cm²]

Section OK

For Negative Moment :

Upper Steel	DB25
Lower Steel	DB25
Stirrup Steel	DB12

d	=	65	[cm]
a try	=	8.7110	[cm]
As	=	36.808	[cm²]
a	=	**4.9490**	[cm]
ϕ Bend	=	0.90	
ϕ Shea	=	0.85	
k1	=	1.05	
Es	=	2040000	[kg/cm²]
Ec	=	284553	[kg/cm²]
n	=	7	
ρ	=	0.0472	
ρ_{max}	=	0.0354	
As	=	230.185	[cm²]
a	=	30.949	[cm]
Mu	=	410400	[kg-m]
M1	=	0	[kg-m]
As'	=	0.0000	[cm²]
No. of steel	=	2	
As	=	9.82	[cm²]
Σ As	=	36.808	[cm²]
No. of steel	=	8	
As	=	39.27	[cm²]

Section OK

KINGDOM OF THAILAND
CHOKCHAI KHATKHAJORN
โชคชัย ขัดขจร
สย. 4522
REGISTERED PROFESSIONAL ENGINEER

Stirrup Design

$0.53\ \phi\ (fc')^{0.5}\ bd$	=	58005	[kg]
L=Ln/2(Vu - ϕ Vc)/Vu	=	29.7	[cm]
S	=	32.500	[cm]

Used Stirrup 2 DB12 @ 0.300 OK

Check Deflection

Δ all	=	0.64 [cm]		
ρ fy	=	12	<	35 [kg/cm²]
Y'	=	12.1		
I	=	2288542	[cm⁴]	
Ec	=	284116	[kg/cm²]	
Δ	=	0.02 [cm]	<	Δ all OK
Δ Time	=	0.01	<	Δ all OK

DYNAMIC ENGINEERING CONSULTANT CO., LTD.

RC-I EXCEL — Ultimate Stress Design method in accordance with ACI 318-89

Design Reinforced Concrete Beam

Project	อาคารทิศตะวันออก โซน ซี	Beam Code	BC-2
Engineer	CKJ	File Name	Beam
		Date	4 Aug 20

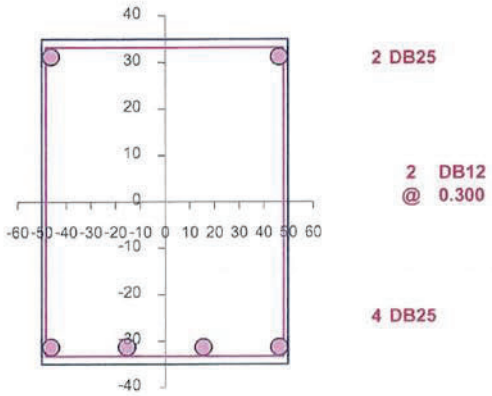

Positive Section
BC-2 (100 X 70)

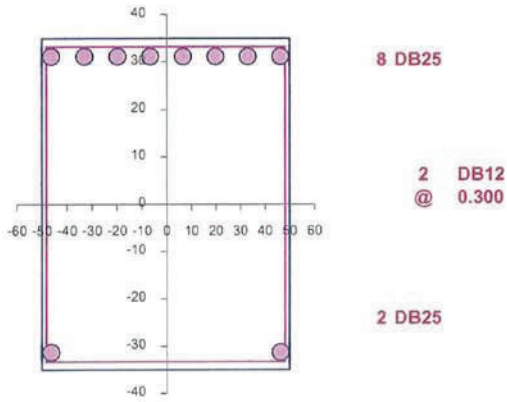

Negative Section
BC-2 (100 X 70)

KINGDOM OF THAILAND
CHOKCHAI KHATKHAJORN
โชคชัย ขัดขจร
สย. 4522
REGISTERED PROFESSIONAL ENGINEER

DYNAMIC ENGINEERING CONSULTANT CO., LTD.

RC-I EXCEL — Ultimate Stress Design method in accordance with ACI 318-89

Design Reinforced Concrete Beam

Project	อาคารทิศตะวันออก โซน ซี	Beam Code	BC-3
Engineer	CKJ	File Name	Beam
		Date	4 Aug 20

	fc'	=	350	[kg/cm²]
	fy SD	=	4000	[kg/cm²]
	fy SD	=	4000	[kg/cm²]
$M_{-pos.}$	Mu^+	=	0	[kg-m]
$M_{-neg.}$	Mu^-	=	52511	[kg-m]
$V_{max.}$	Vu	=	39745	[kg]
	DL	=	11514	[kg/m]
	LL	=	4080	[kg/m]
Length	Ln	=	250	[cm]
width	b	=	25	[cm]
depth	t	=	80	[cm]
	d'	=	5	[cm]
siding	d"	=	3.5	[cm]

KINGDOM OF THAILAND
CHOKCHAI KHATKHAJORN
โชคชัย ขัดขจร
สย. 4522
REGISTERED PROFESSIONAL ENGINEER

For Positive Moment :

Upper Steel	DB25
Lower Steel	DB25
Stirrup Steel	DB12

d	=	75	[cm]
a try	=	0.0000	[cm]
As	=	0.000	[cm²]
a	=	**0.0000**	[cm]
ϕ Bend	=	0.90	
ϕ Shea	=	0.85	
k1	=	0.80	
Es	=	2040000	[kg/cm²]
Ec	=	284553	[kg/cm²]
n	=	7	
ρ	=	0.0360	
ρ_{max}	=	0.0270	
As	=	50.590	[cm²]
a	=	27.208	[cm]
Mu	=	111817	[kg-m]
M1	=	0	[kg-m]
As'	=	0.0000	[cm²]
No. of steel	=	**2**	
As	=	9.82	[cm²]
Σ As	=	0.000	[cm²]
No. of steel	=	**2**	
As	=	9.82	[cm²]

Section OK

For Negative Moment :

Upper Steel	DB25
Lower Steel	DB25
Stirrup Steel	DB12

d	=	75	[cm]
a try	=	8.7110	[cm]
As	=	20.648	[cm²]
a	=	**11.1046**	[cm]
ϕ Bend	=	0.90	
ϕ Shea	=	0.85	
k1	=	1.05	
Es	=	2040000	[kg/cm²]
Ec	=	284553	[kg/cm²]
n	=	7	
ρ	=	0.0472	
ρ_{max}	=	0.0354	
As	=	66.400	[cm²]
a	=	35.711	[cm]
Mu	=	136598	[kg-m]
M1	=	0	[kg-m]
As'	=	0.0000	[cm²]
No. of steel	=	**2**	
As	=	9.82	[cm²]
Σ As	=	20.648	[cm²]
No. of steel	=	**5**	
As	=	24.54	[cm²]

Section OK

Stirrup Design

$0.53\,\phi\,(fc')^{0.5}\,bd$	=	16732	[kg]
L=Ln/2(Vu - ϕ Vc)/Vu	=	80.3	[cm]
S	=	25.064	[cm]

Used Stirrup 1 | DB12 @ 0.250 | OK

Check Deflection

Δ all	=	0.69 [cm]		
ρ fy	=	21	<	35 [kg/cm²]
Y'	=	17.7		
I	=	878906	[cm⁴]	
Ec	=	284116	[kg/cm²]	
Δ	=	0.03 [cm]	<	Δ all OK
Δ Time	=	0.02	<	Δ all OK

DYNAMIC ENGINEERING CONSULTANT CO., LTD.

RC-I EXCEL — Ultimate Stress Design method in accordance with ACI 318-89

Design Reinforced Concrete Beam

Project	อาคารทิศตะวันออก โซน ซี	Beam Code	BC-3
Engineer	CKJ	File Name	Beam
		Date	4 Aug 20

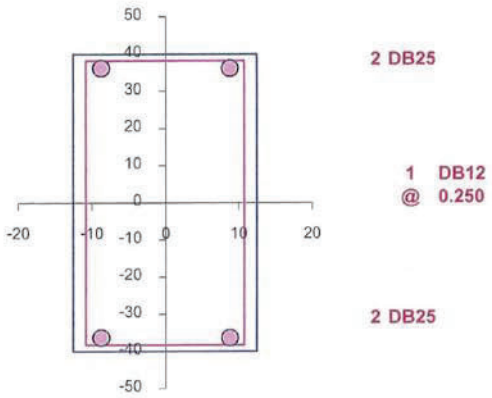

Positive Section
BC-3 (25 X 80)

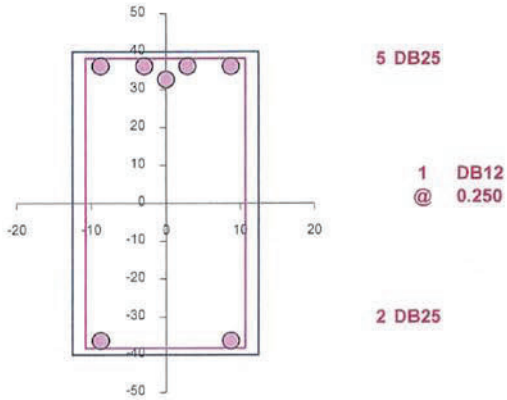

Negative Section
BC-3 (25 X 80)

KINGDOM OF THAILAND
CHOKCHAI KHATKHAJORN
โชคชัย ขัดขจร
สย. 4522
REGISTERED PROFESSIONAL ENGINEER

DYNAMIC ENGINEERING CONSULTANT CO., LTD.	Job No.	193018
Design Reinforced Concrete Beam	Rev.	1
(Ultimate Stress Design method in accordance with ACI 318-89)	Initial	CKJ
Beam No. 2B-1	Date	13-Aug-20
Project : อาคารทิศตะวันออก	File	Beam B

	fc'	=	350	[kg/cm^2]
	fy SD	=	4000	[kg/cm^2]
	fy SR	=	2400	[kg/cm^2]
$M_{-pos.}$	Mu^+	=	53428	[kg-m]
$M_{-neg.}$	Mu^-	=	53428	[kg-m]
$V_{max.}$	Vu	=	30062	[kg]
	DL	=	6530	[kg/m]
	LL	=	2720	[kg/m]
Length	Ln	=	840	[cm]
width	b	=	50	[cm]
depth	t	=	80	[cm]
	d'	=	5	[cm]
siding	d"	=	3.5	[cm]

For Positive Moment :

Upper Steel	DB 25
Lower Steel	DB 25
Stirrup Steel	RB 9

	d	=	75 [cm]
	a try	=	5.5244 [cm]
	As	=	20.545 [cm^2]
	a	=	**5.5247** [cm]
	ϕ Bend	=	0.90
	ϕ Shea	=	0.85
	k1	=	0.80
	Es	=	2040000 [kg/cm^2]
	Ec	=	284553 [kg/cm^2]
	n	=	7
	ρ	=	0.0360
	ρ_{max}	=	0.0270
	As	=	101.180 [cm^2]
	a	=	27.208 [cm]
	Mu	=	223634 [kg-m]
	M1	=	0 [kg-m]
	As'	=	0.0000 [cm^2]
No. of steel		=	**2**
	As	=	9.82 [cm^2]
	Σ As	=	20.545 [cm^2]
No. of steel		=	**5**
	As	=	24.54 [cm^2]

Section OK

For Negative Moment :

Upper Steel	DB 25
Lower Steel	DB 25
Stirrup Steel	RB 9

	d	=	75 [cm]
	a try	=	8.7110 [cm]
	As	=	20.545 [cm^2]
	a	=	**5.5247** [cm]
	ϕ Bend	=	0.90
	ϕ Shea	=	0.85
	k1	=	1.05
	Es	=	2040000 [kg/cm^2]
	Ec	=	284553 [kg/cm^2]
	n	=	7
	ρ	=	0.0472
	ρ_{max}	=	0.0354
	As	=	132.799 [cm^2]
	a	=	35.711 [cm]
	Mu	=	273196 [kg-m]
	M1	=	0 [kg-m]
	As'	=	0.0000 [cm^2]
No. of steel		=	**2**
	As	=	9.82 [cm^2]
	Σ As	=	20.545 [cm^2]
No. of steel		=	**5**
	As	=	24.54 [cm^2]

Section OK

Stirrup Design

$0.53\ \phi\ (fc')^{0.5}$ bd	=	33464	[kg]
L=Ln/2(Vu - ϕ Vc)/Vu	=	22.6	[cm]
S	=	-57.214	[cm]
Used Stirrup		RB 9 @ #N/A	#N/A

Check Deflection

Δ all	=	2.33 [cm]		
ρ fy	=	26	<	35 [kg/cm^2]
Y'	=	19.5		
I	=	1757813 [cm^4]		
Ec	=	284116 [kg/cm^2]		
Δ	=	1.20 [cm]	<	Δ all OK
Δ Time	=	1.98	<	Δ all OK

KINGDOM OF THAILAND
CHOKCHAI KHATKHAJORN
โชคชัย ขัดขจร
สย. 4522
REGISTERED PROFESSIONAL ENGINEER

DYNAMIC ENGINEERING CONSULTANT CO., LTD.		Job No.	193018
Design Reinforced Concrete Beam		Rev.	1
(Ultimate Stress Design method in accordance with ACI 318-89)		Initial	CKJ
Beam No.	2B-1	Date	13-Aug-20
Project :	อาคารทิศตะวันออก	File	Beam B

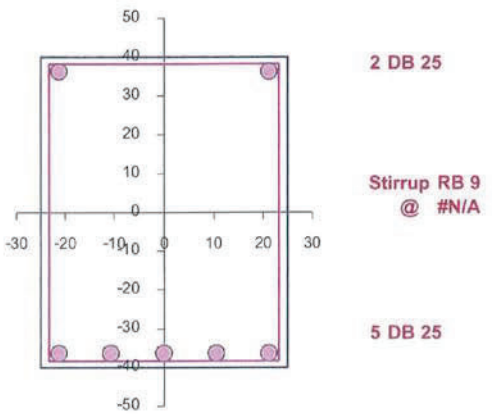

Positive Section

2B-1 (50 X 80)

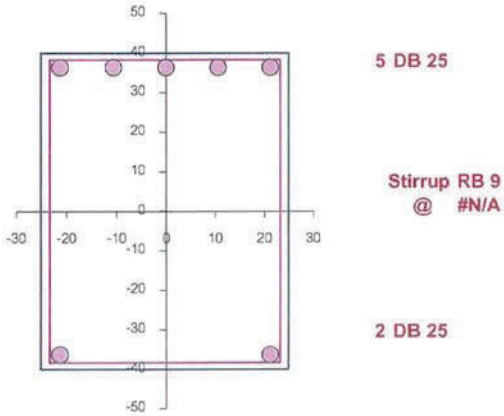

Negative Section

2B-1 (50 X 80)

KINGDOM OF THAILAND
CHOKCHAI KHATKHAJORN
โชคชัย ขัดขจร
สย. 4522
REGISTERED PROFESSIONAL ENGINEER

DYNAMIC ENGINEERING CONSULTANT CO., LTD.	Job No.	193018
Design Reinforced Concrete Beam	Rev.	1
(Ultimate Stress Design method in accordance with ACI 318-89)	Initial	CKJ
Beam No. 2B-1E	Date	09-Nov-20
Project : อาคารทิศตะวันออก	File	Beam B

	fc'	=	350	[kg/cm²]
	fy SD	=	4000	[kg/cm²]
	fy SR	=	2400	[kg/cm²]
$M_{-pos.}$	Mu^{+}	=	40000	[kg-m]
$M_{-neg.}$	Mu^{-}	=	40000	[kg-m]
$V_{max.}$	Vu	=	40000	[kg]
	DL	=	6530	[kg/m]
	LL	=	2720	[kg/m]
Length	Ln	=	400	[cm]
width	b	=	80	[cm]
depth	t	=	60	[cm]
	d'	=	5	[cm]
siding	d"	=	3.5	[cm]

For Positive Moment :

Upper Steel	DB 25
Lower Steel	DB 25
Stirrup Steel	RB 9

	d	=	55	[cm]
	a try	=	3.5068	[cm]
	As	=	20.867	[cm²]
	a	=	**3.5071**	[cm]
	ϕ Bend	=	0.90	
	ϕ Shea	=	0.85	
	k1	=	0.80	
	Es	=	2040000	[kg/cm²]
	Ec	=	284553	[kg/cm²]
	n	=	7	
	ρ	=	0.0360	
	$ρ_{max}$	=	0.0270	
	As	=	118.718	[cm²]
	a	=	19.953	[cm]
	Mu	=	192425	[kg-m]
	M1	=	0	[kg-m]
	As'	=	0.0000	[cm²]
No. of steel		=	**2**	
	As	=	9.82	[cm²]
	Σ As	=	20.867	[cm²]
No. of steel		=	**5**	
	As	=	24.54	[cm²]

Section OK

Stirrup Design

$0.53\ ϕ\ (fc')^{0.5}\ bd$	=	39265	[kg]
L=Ln/2(Vu - ϕ Vc)/Vu	=	33.1	[cm]
S	=	27.500	[cm]
Used Stirrup		RB 9 @ 0.250	OK

For Negative Moment :

Upper Steel	DB 25
Lower Steel	DB 25
Stirrup Steel	RB 9

	d	=	55	[cm]
	a try	=	8.7110	[cm]
	As	=	20.867	[cm²]
	a	=	**3.5071**	[cm]
	ϕ Bend	=	0.90	
	ϕ Shea	=	0.85	
	k1	=	1.05	
	Es	=	2040000	[kg/cm²]
	Ec	=	284553	[kg/cm²]
	n	=	7	
	ρ	=	0.0472	
	$ρ_{max}$	=	0.0354	
	As	=	155.818	[cm²]
	a	=	26.188	[cm]
	Mu	=	235070	[kg-m]
	M1	=	0	[kg-m]
	As'	=	0.0000	[cm²]
No. of steel		=	**2**	
	As	=	9.82	[cm²]
	Σ As	=	20.867	[cm²]
No. of steel		=	**5**	
	As	=	24.54	[cm²]

Section OK

Check Deflection

Δ all	=	1.11	[cm]		
ρ fy	=	22	<	35	[kg/cm²]
Y'	=	13.4			
I	=	1109167	[cm⁴]		
Ec	=	284116	[kg/cm²]		
Δ	=	0.10	[cm] <	Δ all	OK
Δ Time	=	0.16	<	Δ all	OK

KINGDOM OF THAILAND
CHOKCHAI KHATKHAJORN
โชคชัย ขัตขจร
สย. 4522
REGISTERED PROFESSIONAL ENGINEER

DYNAMIC ENGINEERING CONSULTANT CO., LTD.	Job No.	193018
Design Reinforced Concrete Beam	Rev.	1
(Ultimate Stress Design method in accordance with ACI 318-89)	Initial	CKJ
Beam No. 2B-1E	Date	09-Nov-20
Project : อาคารทิศตะวันออก	File	Beam B

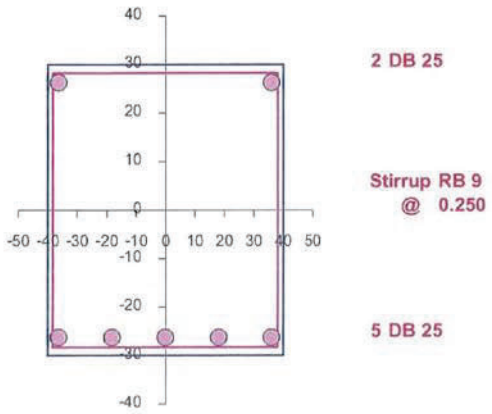

Positive Section
2B-1E (80 X 60)

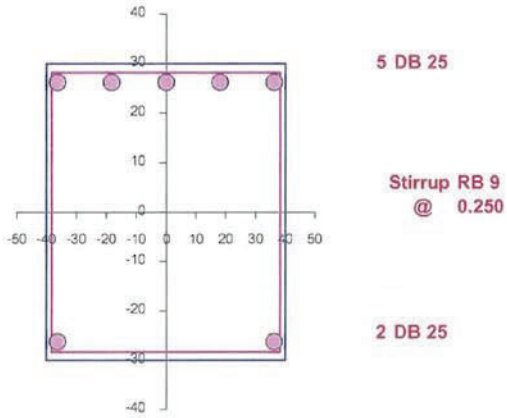

Negative Section
2B-1E (80 X 60)

KINGDOM OF THAILAND
CHOKCHAI KHATKHAJORN
โชคชัย ขัดขจร
สย. 4522
REGISTERED PROFESSIONAL ENGINEER

DYNAMIC ENGINEERING CONSULTANT CO., LTD.	Job No.	193018
Design Reinforced Concrete Beam	Rev.	1
(Ultimate Stress Design method in accordance with ACI 318-89)	Initial	CKJ
Beam No. 2B-EJ	Date	09-Nov-20
Project : อาคารทิศตะวันออก	File	Beam B

	fc'	=	350	[kg/cm²]
	fy SD	=	4000	[kg/cm²]
	fy SR	=	2400	[kg/cm²]
$M_{-pos.}$	Mu^+	=	61509	[kg-m]
$M_{-neg.}$	Mu^-	=	61509	[kg-m]
$V_{max.}$	Vu	=	31100	[kg]
	DL	=	3760	[kg/m]
	LL	=	1020	[kg/m]
Length	Ln	=	700	[cm]
width	b	=	50	[cm]
depth	t	=	70	[cm]
	d'	=	5	[cm]
siding	d"	=	3.5	[cm]

For Positive Moment :

Upper Steel: DB 25
Lower Steel: DB 25
Stirrup Steel: RB 9

d	=	65	[cm]
a try	=	7.5011	[cm]
As	=	27.895	[cm²]
a	=	**7.5013**	[cm]
ϕ Bend	=	0.90	
ϕ Shea	=	0.85	
k1	=	0.80	
Es	=	2040000	[kg/cm²]
Ec	=	284553	[kg/cm²]
n	=	7	
ρ	=	0.0360	
ρ_{max}	=	0.0270	
As	=	87.690	[cm²]
a	=	23.580	[cm]
Mu	=	167974	[kg-m]
M1	=	0	[kg-m]
As'	=	0.0000	[cm²]
No. of steel	=	**2**	
As	=	9.82	[cm²]
Σ As	=	27.895	[cm²]
No. of steel	=	**6**	
As	=	29.45	[cm²]

Section OK

Stirrup Design

$0.53\,\phi\,(fc')^{0.5}\,bd$	=	29003	[kg]
L=Ln/2(Vu - ϕ Vc)/Vu	=	72.6	[cm]
S	=	32.500	[cm]

Used Stirrup RB 9 @ 0.300 OK

For Negative Moment :

Upper Steel: DB 25
Lower Steel: DB 25
Stirrup Steel: RB 9

d	=	65	[cm]
a try	=	8.7110	[cm]
As	=	27.895	[cm²]
a	=	**7.5013**	[cm]
ϕ Bend	=	0.90	
ϕ Shea	=	0.85	
k1	=	1.05	
Es	=	2040000	[kg/cm²]
Ec	=	284553	[kg/cm²]
n	=	7	
ρ	=	0.0472	
ρ_{max}	=	0.0354	
As	=	115.093	[cm²]
a	=	30.949	[cm]
Mu	=	205200	[kg-m]
M1	=	0	[kg-m]
As'	=	0.0000	[cm²]
No. of steel	=	**2**	
As	=	9.82	[cm²]
Σ As	=	27.895	[cm²]
No. of steel	=	**6**	
As	=	29.45	[cm²]

Section OK

Check Deflection

Δ all	=	1.94	[cm]		
ρ fy	=	36	>	35	[kg/cm²]
Y'	=	19.4			
I	=	550385	[cm⁴]		
Ec	=	284116	[kg/cm²]		
Δ	=	0.96	[cm] <	Δ all	OK
Δ Time	=	1.67	<	Δ all	OK

KINGDOM OF THAILAND
CHOKCHAI KHATKHAJORN
โชคชัย ขัดขจร
สย. 4522
REGISTERED PROFESSIONAL ENGINEER

DYNAMIC ENGINEERING CONSULTANT CO., LTD.	Job No.	193018
Design Reinforced Concrete Beam	Rev.	1
(Ultimate Stress Design method in accordance with ACI 318-89)	Initial	CKJ
Beam No. 2B-EJ	Date	09-Nov-20
Project : อาคารทิศตะวันออก	File	Beam B

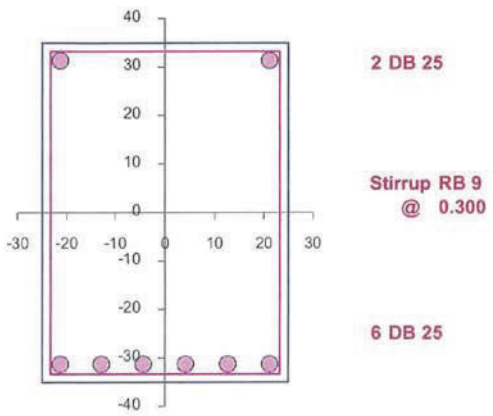

Positive Section
2B-EJ (50 X 70)

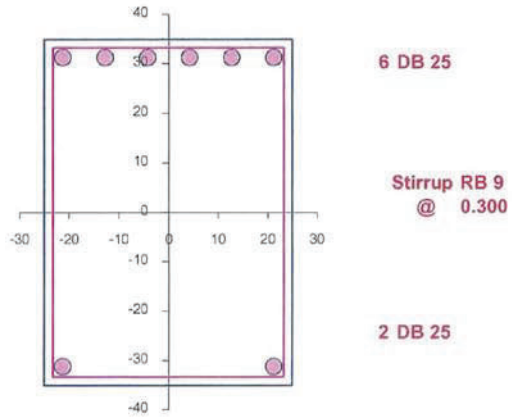

Negative Section
2B-EJ (50 X 70)

KINGDOM OF THAILAND
CHOKCHAI KHATKHAJORN
โชคชัย ขัดขจร
สย. 4522
REGISTERED PROFESSIONAL ENGINEER

DYNAMIC ENGINEERING CONSULTANT CO., LTD.	Job No.	193018
Design Reinforced Concrete Beam	Rev.	1
(Ultimate Stress Design method in accordance with ACI 318-89)	Initial	CKJ
Beam No. B-EJ	Date	09-Nov-20
Project : อาคารทิศตะวันออก	File	Beam B

	fc'	=	350	[kg/cm^2]
	fy SD	=	4000	[kg/cm^2]
	fy SR	=	2400	[kg/cm^2]
$M_{-pos.}$	Mu^+	=	38400	[kg-m]
$M_{-neg.}$	Mu^-	=	38400	[kg-m]
$V_{max.}$	Vu	=	19200	[kg]
	DL	=	3760	[kg/m]
	LL	=	1020	[kg/m]
Length	Ln	=	700	[cm]
width	b	=	50	[cm]
depth	t	=	70	[cm]
	d'	=	5	[cm]
siding	d"	=	3.5	[cm]

For Positive Moment :

Upper Steel: DB 20
Lower Steel: DB 20
Stirrup Steel: RB 9

d	=	65	[cm]
a try	=	4.5734	[cm]
As	=	17.009	[cm^2]
a	=	**4.5737**	[cm]
ϕ Bend	=	0.90	
ϕ Shea	=	0.85	
k1	=	0.80	
Es	=	2040000	[kg/cm^2]
Ec	=	284553	[kg/cm^2]
n	=	7	
ρ	=	0.0360	
ρ_{max}	=	0.0270	
As	=	87.690	[cm^2]
a	=	23.580	[cm]
Mu	=	167974	[kg-m]
M1	=	0	[kg-m]
As'	=	0.0000	[cm^2]
No. of steel	=	2	
As	=	6.28	[cm^2]
Σ As	=	17.009	[cm^2]
No. of steel	=	6	
As	=	18.85	[cm^2]

Section OK

For Negative Moment :

Upper Steel: DB 20
Lower Steel: DB 20
Stirrup Steel: RB 9

d	=	65	[cm]
a try	=	8.7110	[cm]
As	=	17.009	[cm^2]
a	=	**4.5737**	[cm]
ϕ Bend	=	0.90	
ϕ Shea	=	0.85	
k1	=	1.05	
Es	=	2040000	[kg/cm^2]
Ec	=	284553	[kg/cm^2]
n	=	7	
ρ	=	0.0472	
ρ_{max}	=	0.0354	
As	=	115.093	[cm^2]
a	=	30.949	[cm]
Mu	=	205200	[kg-m]
M1	=	0	[kg-m]
As'	=	0.0000	[cm^2]
No. of steel	=	2	
As	=	6.28	[cm^2]
Σ As	=	17.009	[cm^2]
No. of steel	=	6	
As	=	18.85	[cm^2]

Section OK

Stirrup Design

$0.53\ \phi\ (fc')^{0.5}\ bd$	=	29003	[kg]
L=Ln/2(Vu - ϕ Vc)/Vu	=	-99.4	[cm]
S	=	-17.211	[cm]

Used Stirrup RB 9 @ #N/A #N/A

Check Deflection

Δ all	=	1.94	[cm]		
ρ fy	=	23	<	35	[kg/cm^2]
Y'	=	16.1			
I	=	1144271	[cm^4]		
Ec	=	284116	[kg/cm^2]		
Δ	=	0.46	[cm] <	Δ all	OK
Δ Time	=	0.8	<	Δ all	OK

KINGDOM OF THAILAND
CHOKCHAI KHATKHAJORN
โชคชัย ขัดขจร
สย. 4522
REGISTERED PROFESSIONAL ENGINEER

DYNAMIC ENGINEERING CONSULTANT CO., LTD.		Job No.	193018
Design Reinforced Concrete Beam		Rev.	1
(Ultimate Stress Design method in accordance with ACI 318-89)		Initial	CKJ
Beam No.	B-EJ	Date	09-Nov-20
Project :	อาคารทิศตะวันออก	File	Beam B

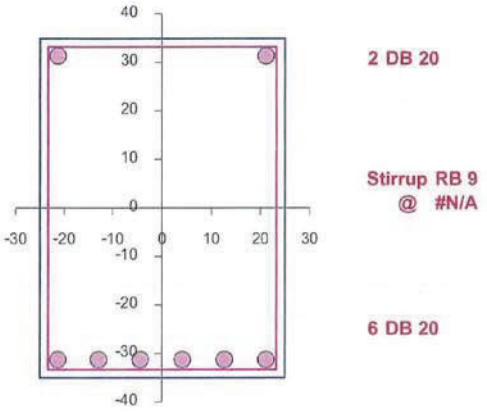

Positive Section

B-EJ (50 X 70)

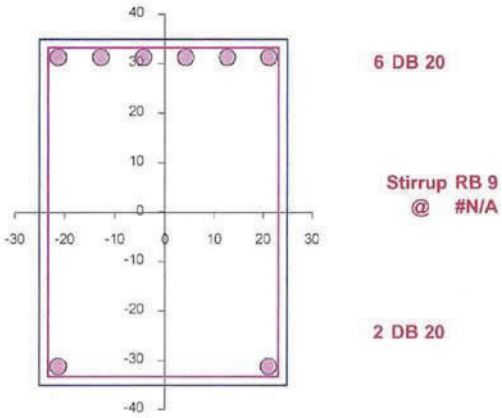

Negative Section

B-EJ (50 X 70)

KINGDOM OF THAILAND
CHOKCHAI KHATKHAJORN
โชคชัย ขัดขจร
สย. 4522
REGISTERED PROFESSIONAL ENGINEER

DYNAMIC ENGINEERING CONSULTANT CO., LTD.

Design Reinforced Concrete Beam

(Ultimate Stress Design method in accordance with ACI 318-89)

Job No.	193018	Beam No.	2B-2
Rev.	1	Project :	อาคารทิศตะวันออก
Initial	CKJ		
Date	13-Aug-20		
File	Beam B		

	fc'	=	350	[kg/cm²]
	fy SD	=	4000	[kg/cm²]
	fy SR	=	2400	[kg/cm²]
$M_{-pos.}$	Mu^{+}	=	40668	[kg-m]
$M_{-neg.}$	Mu^{-}	=	40668	[kg-m]
$V_{max.}$	Vu	=	23833	[kg]
	DL	=	3920	[kg/m]
	LL	=	1530	[kg/m]
Length	Ln	=	600	[cm]
width	b	=	80	[cm]
depth	t	=	60	[cm]
	d'	=	5	[cm]
siding	d''	=	3.5	[cm]

For Positive Moment :

Upper Steel	DB 25
Lower Steel	DB 25
Stirrup Steel	RB 9

	d	=	55	[cm]
	a try	=	3.5676	[cm]
	As	=	21.228	[cm²]
	a	=	3.5677	[cm]
	ϕ Bend	=	0.90	
	ϕ Shea	=	0.85	
	k1	=	0.80	
	Es	=	2040000	[kg/cm²]
	Ec	=	284553	[kg/cm²]
	n	=	7	
	ρ	=	0.0360	
	ρ_{max}	=	0.0270	
	As	=	118.718	[cm²]
	a	=	19.953	[cm]
	Mu	=	192425	[kg-m]
	M1	=	0	[kg-m]
	As'	=	0.0000	[cm²]
No. of steel		=	2	
	As	=	9.82	[cm²]
	Σ As	=	21.228	[cm²]
No. of steel		=	5	
	As	=	24.54	[cm²]

Section OK

For Negative Moment :

Upper Steel	DB 25
Lower Steel	DB 25
Stirrup Steel	RB 9

	d	=	55	[cm]
	a try	=	8.7110	[cm]
	As	=	21.228	[cm²]
	a	=	3.5677	[cm]
	ϕ Bend	=	0.90	
	ϕ Shea	=	0.85	
	k1	=	1.05	
	Es	=	2040000	[kg/cm²]
	Ec	=	284553	[kg/cm²]
	n	=	7	
	ρ	=	0.0472	
	ρ_{max}	=	0.0354	
	As	=	155.818	[cm²]
	a	=	26.188	[cm]
	Mu	=	235070	[kg-m]
	M1	=	0	[kg-m]
	As'	=	0.0000	[cm²]
No. of steel		=	2	
	As	=	9.82	[cm²]
	Σ As	=	21.228	[cm²]
No. of steel		=	5	
	As	=	24.54	[cm²]

Section OK

Stirrup Design

$0.53\ \phi\ (fc')^{0.5}\ bd$	=	39265	[kg]
L=Ln/2(Vu - ϕ Vc)/Vu	=	-120.1	[cm]
S	=	-9.251	[cm]
Used Stirrup		RB 9 @ #N/A	#N/A

Check Deflection

Δ all	=	1.67 [cm]		
ρ fy	=	22	<	35 [kg/cm²]
Y'	=	13.4		
I	=	1109167 [cm⁴]		
Ec	=	284116 [kg/cm²]		
Δ	=	0.29 [cm]	<	Δ all OK
Δ Time	=	0.49	<	Δ all OK

KINGDOM OF THAILAND
CHOKCHAI KHATKHAJORN
โชคชัย ขัดขจร
สย. 4522
REGISTERED PROFESSIONAL ENGINEER

DYNAMIC ENGINEERING CONSULTANT CO., LTD.		Job No.	193018
Design Reinforced Concrete Beam		Rev.	1
(Ultimate Stress Design method in accordance with ACI 318-89)		Initial	CKJ
Beam No.	2B-2	Date	13-Aug-20
Project :	อาคารทิศตะวันออก	File	Beam B

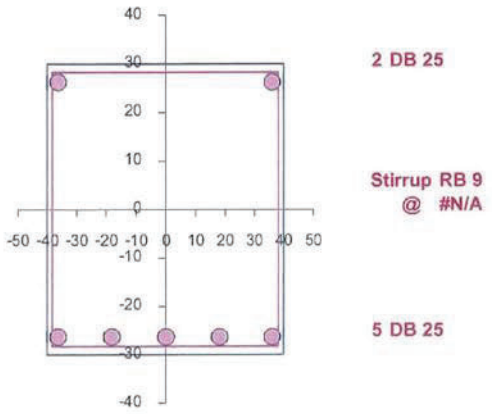

Positive Section

2B-2 (80 X 60)

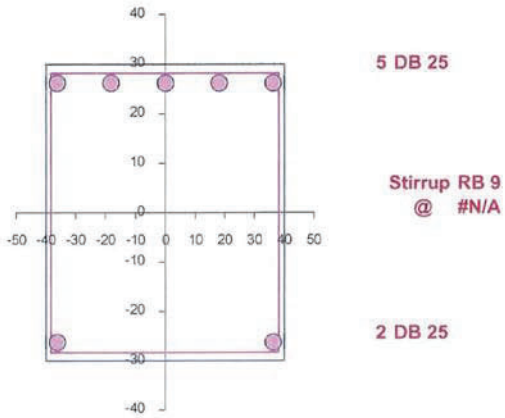

Negative Section

2B-2 (80 X 60)

KINGDOM OF THAILAND
CHOKCHAI KHATKHAJORN
โชคชัย ขัดขจร
สย. 4522
REGISTERED PROFESSIONAL ENGINEER

DYNAMIC ENGINEERING CONSULTANT CO., LTD.	Job No.	193018
Design Reinforced Concrete Beam	Rev.	1
(Ultimate Stress Design method in accordance with ACI 318-89)	Initial	CKJ
Beam No. 2B-3	Date	13-Aug-20
Project : อาคารทิศตะวันออก	File	Beam B

	fc'	=	350	[kg/cm²]
	fy SD	=	4000	[kg/cm²]
	fy SR	=	2400	[kg/cm²]
$M_{-pos.}$	Mu^+	=	48960	[kg-m]
$M_{-neg.}$	Mu^-	=	48960	[kg-m]
$V_{max.}$	Vu	=	24480	[kg]
	DL	=	5100	[kg/m]
	LL	=	1020	[kg/m]
Length	Ln	=	800	[cm]
width	b	=	80	[cm]
depth	t	=	60	[cm]
	d'	=	5	[cm]
siding	d''	=	3.5	[cm]

For Positive Moment :

Upper Steel	DB 25
Lower Steel	DB 25
Stirrup Steel	RB 9

	d	=	55 [cm]
	a try	=	4.3259 [cm]
	As	=	25.740 [cm²]
	a	=	**4.3260** [cm]
	ϕ Bend	=	0.90
	ϕ Shea	=	0.85
	k1	=	0.80
	Es	=	2040000 [kg/cm²]
	Ec	=	284553 [kg/cm²]
	n	=	7
	ρ	=	0.0360
	ρ_{max}	=	0.0270
	As	=	118.718 [cm²]
	a	=	19.953 [cm]
	Mu	=	192425 [kg-m]
	M1	=	0 [kg-m]
	As'	=	0.0000 [cm²]
No. of steel		=	2
	As	=	9.82 [cm²]
	Σ As	=	25.740 [cm²]
No. of steel		=	6
	As	=	29.45 [cm²]

Section OK

Stirrup Design

$0.53\,\phi\,(fc')^{0.5}\,bd$	=	39265	[kg]
L=Ln/2(Vu - ϕ Vc)/Vu	=	-145.3	[cm]
S	=	-9.656	[cm]

Used Stirrup RB 9 @ #N/A #N/A

For Negative Moment :

Upper Steel	DB 25
Lower Steel	DB 25
Stirrup Steel	RB 9

	d	=	55 [cm]
	a try	=	8.7110 [cm]
	As	=	25.740 [cm²]
	a	=	**4.3260** [cm]
	ϕ Bend	=	0.90
	ϕ Shea	=	0.85
	k1	=	1.05
	Es	=	2040000 [kg/cm²]
	Ec	=	284553 [kg/cm²]
	n	=	7
	ρ	=	0.0472
	ρ_{max}	=	0.0354
	As	=	155.818 [cm²]
	a	=	26.188 [cm]
	Mu	=	235070 [kg-m]
	M1	=	0 [kg-m]
	As'	=	0.0000 [cm²]
No. of steel		=	2
	As	=	9.82 [cm²]
	Σ As	=	25.740 [cm²]
No. of steel		=	6
	As	=	29.45 [cm²]

Section OK

Check Deflection

Δ all	=	2.22 [cm]		
ρ fy	=	27	<	35 [kg/cm²]
Y'	=	14.5		
I	=	1109167 [cm⁴]		
Ec	=	284116 [kg/cm²]		
Δ	=	1.04 [cm]	<	Δ all OK
Δ Time	=	1.86	<	Δ all OK

KINGDOM OF THAILAND
CHOKCHAI KHATKHAJORN
โชคชัย ขัดขจร
สย. 4522
REGISTERED PROFESSIONAL ENGINEER

DYNAMIC ENGINEERING CONSULTANT CO., LTD.	Job No.	193018
Design Reinforced Concrete Beam	Rev.	1
(Ultimate Stress Design method in accordance with ACI 318-89)	Initial	CKJ
Beam No. 2B-3	Date	13-Aug-20
Project : อาคารทิศตะวันออก	File	Beam B

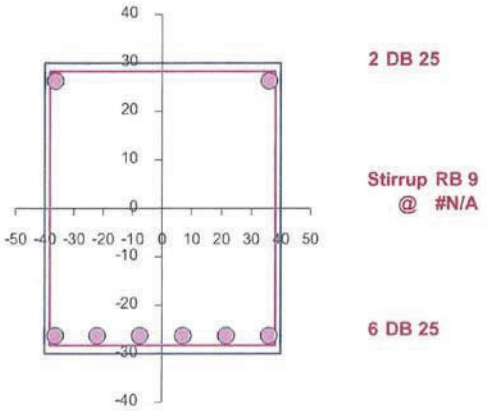

Positive Section
2B-3 (80 X 60)

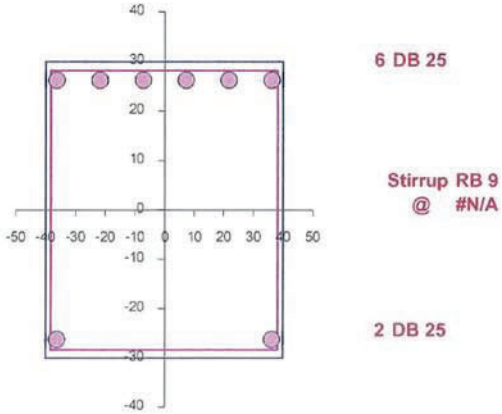

Negative Section
2B-3 (80 X 60)

KINGDOM OF THAILAND
CHOKCHAI KHATKHAJORN
โชคชัย ขัดขจร
สย. 4522
REGISTERED PROFESSIONAL ENGINEER

DYNAMIC ENGINEERING CONSULTANT CO., LTD.	Job No.	193018
Design Reinforced Concrete Beam	Rev.	1
(Ultimate Stress Design method in accordance with ACI 318-89)	Initial	CKJ
Beam No. 2B-4	Date	13-Aug-20
Project : อาคารทิศตะวันออก	File	Beam B

	fc'	=	350	[kg/cm^2]
	fy SD	=	4000	[kg/cm^2]
	fy SR	=	2400	[kg/cm^2]
$M_{-pos.}$	Mu^+	=	38896	[kg-m]
$M_{-neg.}$	Mu^-	=	19490	[kg-m]
$V_{max.}$	Vu	=	18522	[kg]
	DL	=	3390	[kg/m]
	LL	=	1020	[kg/m]
Length	Ln	=	840	[cm]
width	b	=	30	[cm]
depth	t	=	80	[cm]
	d'	=	5	[cm]
siding	d"	=	3.5	[cm]

For Positive Moment :

Upper Steel	DB 25
Lower Steel	DB 25
Stirrup Steel	RB 9

d	=	75	[cm]
a try	=	6.7605	[cm]
As	=	15.086	[cm^2]
a	=	**6.7612**	[cm]
ϕ Bend	=	0.90	
ϕ Shea	=	0.85	
k1	=	0.80	
Es	=	2040000	[kg/cm^2]
Ec	=	284553	[kg/cm^2]
n	=	7	
ρ	=	0.0360	
ρ_{max}	=	0.0270	
As	=	60.708	[cm^2]
a	=	27.208	[cm]
Mu	=	134181	[kg-m]
M1	=	0	[kg-m]
As'	=	0.0000	[cm^2]
No. of steel	=	**2**	
As	=	9.82	[cm^2]
Σ As	=	15.086	[cm^2]
No. of steel	=	**4**	
As	=	19.63	[cm^2]

Section OK

Stirrup Design

$0.53\ \phi\ (fc')^{0.5}\ bd$	=	20079	[kg]
L=Ln/2(Vu - ϕ Vc)/Vu	=	33.0	[cm]
S	=	-125.055	[cm]

Used Stirrup RB 9 @ #N/A #N/A

For Negative Moment :

Upper Steel	DB 25
Lower Steel	DB 25
Stirrup Steel	RB 9

d	=	75	[cm]
a try	=	8.7110	[cm]
As	=	7.559	[cm^2]
a	=	**6.7612**	[cm]
ϕ Bend	=	0.90	
ϕ Shea	=	0.85	
k1	=	1.05	
Es	=	2040000	[kg/cm^2]
Ec	=	284553	[kg/cm^2]
n	=	7	
ρ	=	0.0472	
ρ_{max}	=	0.0354	
As	=	79.680	[cm^2]
a	=	35.711	[cm]
Mu	=	163917	[kg-m]
M1	=	0	[kg-m]
As'	=	0.0000	[cm^2]
No. of steel	=	**2**	
As	=	9.82	[cm^2]
Σ As	=	7.559	[cm^2]
No. of steel	=	**2**	
As	=	9.82	[cm^2]

Section OK

Check Deflection

Δ all	=	2.33	[cm]		
ρ fy	=	35	<	35	[kg/cm^2]
Y'	=	22			
I	=	1054688	[cm^4]		
Ec	=	284116	[kg/cm^2]		
Δ	=	0.95	[cm] <	Δ all	OK
Δ Time	=	0.66	<	Δ all	OK

KINGDOM OF THAILAND
CHOKCHAI KHATKHAJORN
โชคชัย ขัดขจร
สย. 4522
REGISTERED PROFESSIONAL ENGINEER

DYNAMIC ENGINEERING CONSULTANT CO., LTD.	Job No.	193018
Design Reinforced Concrete Beam	Rev.	1
(Ultimate Stress Design method in accordance with ACI 318-89)	Initial	CKJ
Beam No. 2B-4	Date	13-Aug-20
Project : อาคารทิศตะวันออก	File	Beam B

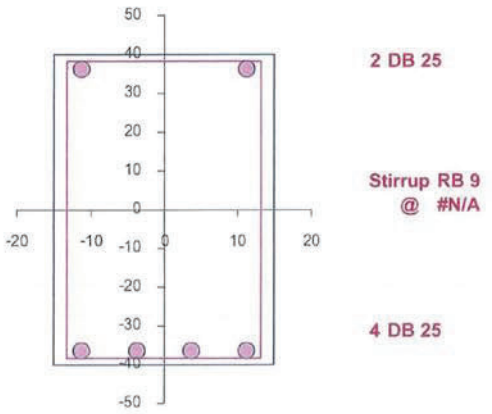

Positive Section
2B-4 (30 X 80)

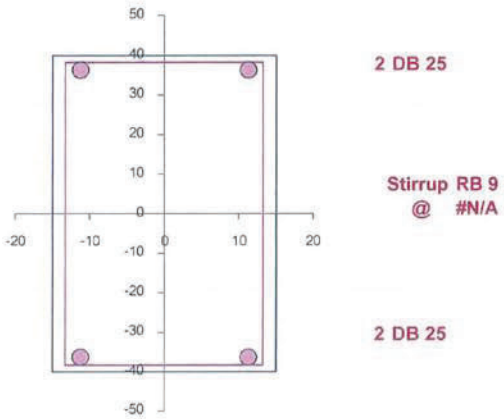

Negative Section
2B-4 (30 X 80)

KINGDOM OF THAILAND
CHOKCHAI KHATKHAJORN
โชคชัย ขัดขจร
สย. 4522
REGISTERED PROFESSIONAL ENGINEER

DYNAMIC ENGINEERING CONSULTANT CO., LTD.		Job No.	193018
Design Reinforced Concrete Beam		Rev.	1
(Ultimate Stress Design method in accordance with ACI 318-89)		Initial	CKJ
Beam No.	3B-1	Date	13-Aug-20
Project :	อาคารทิศตะวันออก	File	Beam B

	fc'	=	350	[kg/cm^2]
	fy SD	=	4000	[kg/cm^2]
	fy SR	=	2400	[kg/cm^2]
$M_{-pos.}$	Mu^+	=	63757	[kg-m]
$M_{-neg.}$	Mu^-	=	30000	[kg-m]
$V_{max.}$	Vu	=	30005	[kg]
	DL	=	4305	[kg/m]
	LL	=	1530	[kg/m]
Length	Ln	=	600	[cm]
width	b	=	80	[cm]
depth	t	=	60	[cm]
	d'	=	5	[cm]
siding	d"	=	3.5	[cm]

For Positive Moment :

Upper Steel	DB 25
Lower Steel	DB 25
Stirrup Steel	RB 9

	d	=	55	[cm]
	a try	=	5.7079	[cm]
	As	=	33.963	[cm^2]
	a	=	**5.7080**	[cm]
	ϕ Bend	=	0.90	
	ϕ Shea	=	0.85	
	k1	=	0.80	
	Es	=	2040000	[kg/cm^2]
	Ec	=	284553	[kg/cm^2]
	n	=	7	
	ρ	=	0.0360	
	ρ_{max}	=	0.0270	
	As	=	118.718	[cm^2]
	a	=	19.953	[cm]
	Mu	=	192425	[kg-m]
	M1	=	0	[kg-m]
	As'	=	0.0000	[cm^2]
No. of steel		=	**2**	
	As	=	9.82	[cm^2]
	Σ As	=	33.963	[cm^2]
No. of steel		=	**7**	
	As	=	34.36	[cm^2]

Section OK

For Negative Moment :

Upper Steel	DB 25
Lower Steel	DB 25
Stirrup Steel	RB 9

	d	=	55	[cm]
	a try	=	8.7110	[cm]
	As	=	15.981	[cm^2]
	a	=	**5.7080**	[cm]
	ϕ Bend	=	0.90	
	ϕ Shea	=	0.85	
	k1	=	1.05	
	Es	=	2040000	[kg/cm^2]
	Ec	=	284553	[kg/cm^2]
	n	=	7	
	ρ	=	0.0472	
	ρ_{max}	=	0.0354	
	As	=	155.818	[cm^2]
	a	=	26.188	[cm]
	Mu	=	235070	[kg-m]
	M1	=	0	[kg-m]
	As'	=	0.0000	[cm^2]
No. of steel		=	**2**	
	As	=	9.82	[cm^2]
	Σ As	=	15.981	[cm^2]
No. of steel		=	**4**	
	As	=	19.63	[cm^2]

Section OK

Stirrup Design

$0.53\ \phi\ (fc')^{0.5}\ bd$	=	39265	[kg]
L=Ln/2(Vu - ϕ Vc)/Vu	=	-33.7	[cm]
S	=	-15.417	[cm]
Used Stirrup		RB 9 @ #N/A	#N/A

Check Deflection

Δ all	=	1.67	[cm]		
ρ fy	=	31	<	35	[kg/cm^2]
Y'	=	15.4			
I	=	1109167	[cm^4]		
Ec	=	284116	[kg/cm^2]		
Δ	=	0.31 [cm]	<	Δ all	OK
Δ Time	=	0.53	<	Δ all	OK

KINGDOM OF THAILAND
CHOKCHAI KHATKHAJORN
โชคชัย ขัดขจร
สย. 4522
REGISTERED PROFESSIONAL ENGINEER

DYNAMIC ENGINEERING CONSULTANT CO., LTD.		Job No.	193018
Design Reinforced Concrete Beam		Rev.	1
(Ultimate Stress Design method in accordance with ACI 318-89)		Initial	CKJ
Beam No.	3B-1	Date	13-Aug-20
Project :	อาคารทิศตะวันออก	File	Beam B

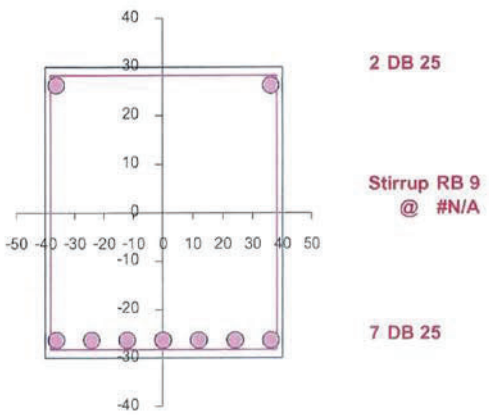

Positive Section

3B-1 (80 X 60)

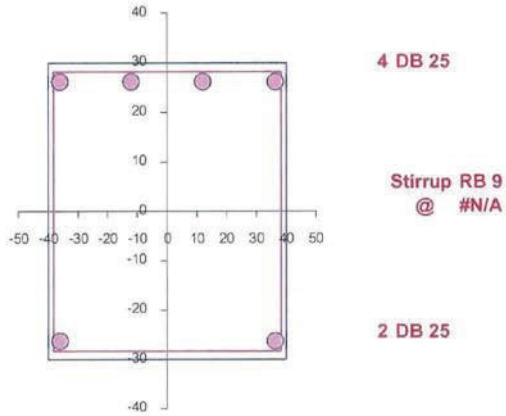

Negative Section

3B-1 (80 X 60)

KINGDOM OF THAILAND
CHOKCHAI KHATKHAJORN
โชคชัย ขัดขจร
สย. 4522
REGISTERED PROFESSIONAL ENGINEER

DYNAMIC ENGINEERING CONSULTANT CO., LTD.		Job No.	193018
Design Reinforced Concrete Beam		Rev.	1
(Ultimate Stress Design method in accordance with ACI 318-89)		Initial	CKJ
Beam No.	3B-2	Date	26-Aug-20
Project :	อาคารทิศตะวันออก	File	Beam B

	fc'	=	350	[kg/cm^2]
	fy SD	=	4000	[kg/cm^2]
	fy SR	=	2400	[kg/cm^2]
$M_{+pos.}$	Mu^+	=	35414	[kg-m]
$M_{-neg.}$	Mu^-	=	17500	[kg-m]
$V_{max.}$	Vu	=	18639	[kg]
	DL	=	3375	[kg/m]
	LL	=	1530	[kg/m]
Length	Ln	=	760	[cm]
width	b	=	30	[cm]
depth	t	=	70	[cm]
	d'	=	5	[cm]
siding	d"	=	3.5	[cm]

For Positive Moment :

Upper Steel	DB 25
Lower Steel	DB 25
Stirrup Steel	RB 9

d	=	65	[cm]
a try	=	7.1789	[cm]
As	=	16.019	[cm^2]
a	=	**7.1793**	[cm]
ϕ Bend	=	0.90	
ϕ Shea	=	0.85	
k1	=	0.80	
Es	=	2040000	[kg/cm^2]
Ec	=	284553	[kg/cm^2]
n	=	7	
ρ	=	0.0360	
ρ_{max}	=	0.0270	
As	=	52.614	[cm^2]
a	=	23.580	[cm]
Mu	=	100784	[kg-m]
M1	=	0	[kg-m]
As'	=	0.0000	[cm^2]
No. of steel	=	**2**	
As	=	9.82	[cm^2]
Σ As	=	16.019	[cm^2]
No. of steel	=	**4**	
As	=	19.63	[cm^2]

Section OK

Stirrup Design

$0.53\ \phi\ (fc')^{0.5}\ bd$	=	17402	[kg]
L=Ln/2(Vu - ϕ Vc)/Vu	=	78.4	[cm]
S	=	32.500	[cm]
Used Stirrup		**RB 9 @ 0.300**	**OK**

For Negative Moment :

Upper Steel	DB 25
Lower Steel	DB 25
Stirrup Steel	RB 9

d	=	65	[cm]
a try	=	8.7110	[cm]
As	=	7.916	[cm^2]
a	=	**7.1793**	[cm]
ϕ Bend	=	0.90	
ϕ Shea	=	0.85	
k1	=	1.05	
Es	=	2040000	[kg/cm^2]
Ec	=	284553	[kg/cm^2]
n	=	7	
ρ	=	0.0472	
ρ_{max}	=	0.0354	
As	=	69.056	[cm^2]
a	=	30.949	[cm]
Mu	=	123120	[kg-m]
M1	=	0	[kg-m]
As'	=	0.0000	[cm^2]
No. of steel	=	**2**	
As	=	9.82	[cm^2]
Σ As	=	7.916	[cm^2]
No. of steel	=	**2**	
As	=	9.82	[cm^2]

Section OK

Check Deflection

Δ all	=	2.11	[cm]		
ρ fy	=	40	>	35	[kg/cm^2]
Y'	=	20.2			
I	=	358279	[cm^4]		
Ec	=	284116	[kg/cm^2]		
Δ	=	2.09	[cm] <	Δ all	OK
Δ Time	=	1.36	<	Δ all	OK

KINGDOM OF THAILAND
CHOKCHAI KHATKHAJORN
โชคชัย ขัดขจร
สย. 4522
REGISTERED PROFESSIONAL ENGINEER

DYNAMIC ENGINEERING CONSULTANT CO., LTD.		Job No.	193018
Design Reinforced Concrete Beam		Rev.	1
(Ultimate Stress Design method in accordance with ACI 318-89)		Initial	CKJ
Beam No.	3B-2	Date	26-Aug-20
Project :	อาคารทิศตะวันออก	File	Beam B

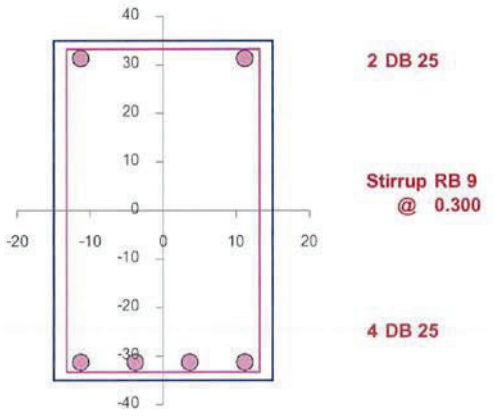

Positive Section

3B-2 (30 X 70)

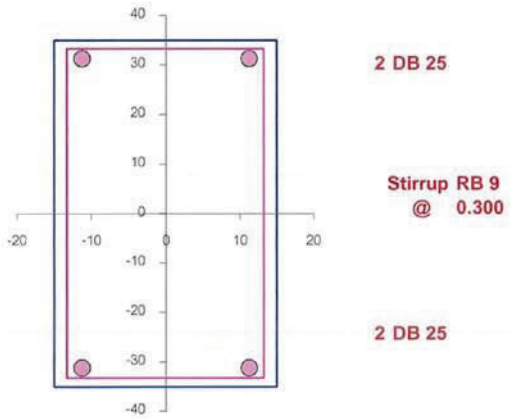

Negative Section

3B-2 (30 X 70)

KINGDOM OF THAILAND
CHOKCHAI KHATKHAJORN
โชคชัย ขัดขจร
สย. 4522
REGISTERED PROFESSIONAL ENGINEER

DYNAMIC ENGINEERING CONSULTANT CO., LTD.	Job No.	193018
Design Reinforced Concrete Beam	Rev.	1
(Ultimate Stress Design method in accordance with ACI 318-89)	Initial	CKJ
Beam No. 4B-1	Date	12-Nov-20
Project : อาคารทิศตะวันออก	File	Beam B

	fc'	=	350	[kg/cm^2]
	fy SD	=	4000	[kg/cm^2]
	fy SR	=	2400	[kg/cm^2]
$M_{-pos.}$	Mu^+	=	50805	[kg-m]
$M_{-neg.}$	Mu^-	=	25000	[kg-m]
$V_{max.}$	Vu	=	30870	[kg]
	DL	=	6190	[kg/m]
	LL	=	5100	[kg/m]
Length	Ln	=	600	[cm]
width	b	=	80	[cm]
depth	t	=	60	[cm]
	d'	=	5	[cm]
siding	d"	=	3.5	[cm]

For Positive Moment :

Upper Steel: DB 25
Lower Steel: DB 25
Stirrup Steel: RB 9

d	=	55	[cm]
a try	=	4.4960	[cm]
As	=	26.753	[cm^2]
a	=	**4.4962**	[cm]
ϕ Bend	=	0.90	
ϕ Shea	=	0.85	
k1	=	0.80	
Es	=	2040000	[kg/cm^2]
Ec	=	284553	[kg/cm^2]
n	=	7	
ρ	=	0.0360	
ρ_{max}	=	0.0270	
As	=	118.718	[cm^2]
a	=	19.953	[cm]
Mu	=	192425	[kg-m]
M1	=	0	[kg-m]
As'	=	0.0000	[cm^2]
No. of steel	=	**2**	
As	=	9.82	[cm^2]
Σ As	=	26.753	[cm^2]
No. of steel	=	**6**	
As	=	29.45	[cm^2]

Section OK

Stirrup Design

0.53 ϕ (fc')$^{0.5}$ bd	=	39265	[kg]
L=Ln/2(Vu - ϕ Vc)/Vu	=	-24.3	[cm]
S	=	-17.005	[cm]

Used Stirrup RB 9 @ #N/A #N/A

For Negative Moment :

Upper Steel: DB 25
Lower Steel: DB 25
Stirrup Steel: RB 9

d	=	55	[cm]
a try	=	8.7110	[cm]
As	=	13.164	[cm^2]
a	=	**4.4962**	[cm]
ϕ Bend	=	0.90	
ϕ Shea	=	0.85	
k1	=	1.05	
Es	=	2040000	[kg/cm^2]
Ec	=	284553	[kg/cm^2]
n	=	7	
ρ	=	0.0472	
ρ_{max}	=	0.0354	
As	=	155.818	[cm^2]
a	=	26.188	[cm]
Mu	=	235070	[kg-m]
M1	=	0	[kg-m]
As'	=	0.0000	[cm^2]
No. of steel	=	**2**	
As	=	9.82	[cm^2]
Σ As	=	13.164	[cm^2]
No. of steel	=	**3**	
As	=	14.73	[cm^2]

Section OK

Check Deflection

Δ all	=	1.67	[cm]		
ρ fy	=	27	<	35	[kg/cm^2]
Y'	=	14.5			
I	=	1109167	[cm^4]		
Ec	=	284116	[kg/cm^2]		
Δ	=	0.60	[cm] <	Δ all	OK
Δ Time	=	0.88	<	Δ all	OK

KINGDOM OF THAILAND
CHOKCHAI KHATKHAJORN
โชคชัย ขัดขจร
สย. 4522
REGISTERED PROFESSIONAL ENGINEER

DYNAMIC ENGINEERING CONSULTANT CO., LTD.		Job No.	193018
Design Reinforced Concrete Beam		Rev.	1
(Ultimate Stress Design method in accordance with ACI 318-89)		Initial	CKJ
Beam No.	4B-1	Date	12-Nov-20
Project :	อาคารทิศตะวันออก	File	Beam B

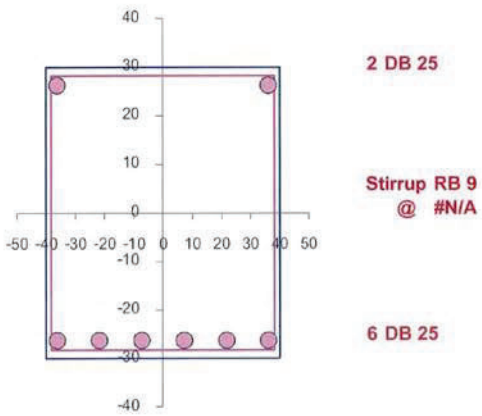

Positive Section

4B-1 (80 X 60)

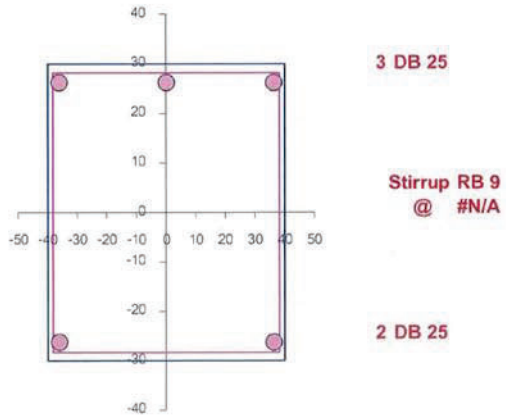

Negative Section

4B-1 (80 X 60)

KINGDOM OF THAILAND
CHOKCHAI KHATKHAJORN
โชคชัย ขัดขจร
สย. 4522
REGISTERED PROFESSIONAL ENGINEER

DYNAMIC ENGINEERING CONSULTANT CO., LTD.	Job No.	193018
Design Reinforced Concrete Beam	Rev.	1
(Ultimate Stress Design method in accordance with ACI 318-89)	Initial	CKJ
Beam No. 4B-2	Date	26-Aug-20
Project : อาคารทิศตะวันออก	File	Beam B

	fc'	=	350	[kg/cm^2]
	fy SD	=	4000	[kg/cm^2]
	fy SR	=	2400	[kg/cm^2]
$M_{-pos.}$	Mu^+	=	56178	[kg-m]
$M_{-neg.}$	Mu^-	=	56178	[kg-m]
$V_{max.}$	Vu	=	40128	[kg]
	DL	=	11465	[kg/m]
	LL	=	6800	[kg/m]
Length	Ln	=	700	[cm]
width	b	=	80	[cm]
depth	t	=	70	[cm]
	d'	=	5	[cm]
siding	d''	=	3.5	[cm]

For Positive Moment :

Upper Steel	DB 25
Lower Steel	DB 25
Stirrup Steel	RB 9

	d	=	65 [cm]
	a try	=	4.1685 [cm]
	As	=	24.803 [cm^2]
	a	=	**4.1686** [cm]
	ϕ Bend	=	0.90
	ϕ Shea	=	0.85
	k1	=	0.80
	Es	=	2040000 [kg/cm^2]
	Ec	=	284553 [kg/cm^2]
	n	=	7
	ρ	=	0.0360
	ρ_{max}	=	0.0270
	As	=	140.303 [cm^2]
	a	=	23.580 [cm]
	Mu	=	268759 [kg-m]
	M1	=	0 [kg-m]
	As'	=	0.0000 [cm^2]
	No. of steel	=	**2**
	As	=	9.82 [cm^2]
	Σ As	=	24.803 [cm^2]
	No. of steel	=	**6**
	As	=	29.45 [cm^2]

Section OK

Stirrup Design

0.53 ϕ (fc')$^{0.5}$ bd	=	46404	[kg]
L=Ln/2(Vu - ϕ Vc)/Vu	=	6.0	[cm]
S	=	-26.882	[cm]
Used Stirrup		RB 9 @ #N/A	#N/A

For Negative Moment :

Upper Steel	DB 25
Lower Steel	DB 25
Stirrup Steel	RB 9

	d	=	65 [cm]
	a try	=	8.7110 [cm]
	As	=	24.803 [cm^2]
	a	=	**4.1686** [cm]
	ϕ Bend	=	0.90
	ϕ Shea	=	0.85
	k1	=	1.05
	Es	=	2040000 [kg/cm^2]
	Ec	=	284553 [kg/cm^2]
	n	=	7
	ρ	=	0.0472
	ρ_{max}	=	0.0354
	As	=	184.148 [cm^2]
	a	=	30.949 [cm]
	Mu	=	328320 [kg-m]
	M1	=	0 [kg-m]
	As'	=	0.0000 [cm^2]
	No. of steel	=	**2**
	As	=	9.82 [cm^2]
	Σ As	=	24.803 [cm^2]
	No. of steel	=	**6**
	As	=	29.45 [cm^2]

Section OK

Check Deflection

Δ all	=	1.94 [cm]			
ρ fy	=	23	<	35	[kg/cm^2]
Y'	=	15.9			
I	=	1830833	[cm^4]		
Ec	=	284116	[kg/cm^2]		
Δ	=	1.10 [cm]	<	Δ all	OK
Δ Time	=	1.71	<	Δ all	OK

KINGDOM OF THAILAND
CHOKCHAI KHATKHAJORN
โชคชัย ขัดขจร
สย. 4522
REGISTERED PROFESSIONAL ENGINEER

DYNAMIC ENGINEERING CONSULTANT CO., LTD.		Job No.	193018
Design Reinforced Concrete Beam		Rev.	1
(Ultimate Stress Design method in accordance with ACI 318-89)		Initial	CKJ
Beam No.	4B-2	Date	26-Aug-20
Project :	อาคารทิศตะวันออก	File	Beam B

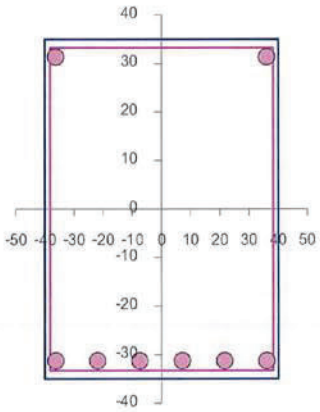

2 DB 25

Stirrup RB 9
@ #N/A

6 DB 25

Positive Section

4B-2 (80 X 70)

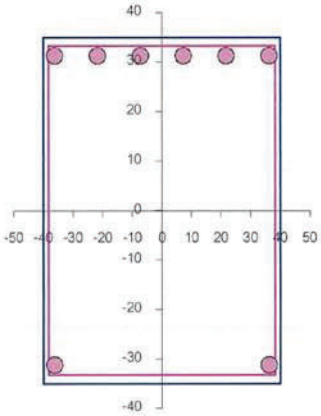

6 DB 25

Stirrup RB 9
@ #N/A

2 DB 25

Negative Section

4B-2 (80 X 70)

KINGDOM OF THAILAND
CHOKCHAI KHATKHAJORN
โชคชัย ขัดขจร
สย. 4522
REGISTERED PROFESSIONAL ENGINEER

DYNAMIC ENGINEERING CONSULTANT CO., LTD.

RC-I EXCEL — **Ultimate Stress Design method in accordance with ACI 318-89**

Design Reinforced Concrete Beam

Project	อาคารทิศตะวันออก โซน ซี	**Beam Code**	MB-1
Engineer	CKJ	**File Name**	Beam MB
		Date	29 Jun 20

	fc'	=	350	[kg/cm^2]
	fy SD	=	4000	[kg/cm^2]
	fy SD	=	2400	[kg/cm^2]
$M_{-pos.}$	Mu^+	=	58784	[kg-m]
$M_{-neg.}$	Mu^-	=	58784	[kg-m]
$V_{max.}$	Vu	=	36740	[kg]
	DL	=	2385	[kg/m]
	LL	=	6800	[kg/m]
Length	Ln	=	800	[cm]
width	b	=	30	[cm]
depth	t	=	90	[cm]
	d'	=	5	[cm]
siding	d"	=	3.5	[cm]

For Positive Moment :

Upper Steel	DB28
Lower Steel	DB28
Stirrup Steel	DB12

	d	=	85 [cm]
	a try	=	9.0965 [cm]
	As	=	20.296 [cm^2]
	a	=	**9.0965** [cm]
	ϕ Bend	=	0.90
	ϕ Shea	=	0.85
	k1	=	0.80
	Es	=	2040000 [kg/cm^2]
	Ec	=	284553 [kg/cm^2]
	n	=	7
	ρ	=	0.0360
	ρ_{max}	=	0.0270
	As	=	68.803 [cm^2]
	a	=	30.836 [cm]
	Mu	=	172347 [kg-m]
	M1	=	0 [kg-m]
	As'	=	0.0000 [cm^2]
No. of steel		=	**2**
	As	=	12.32 [cm^2]
	Σ As	=	20.296 [cm^2]
No. of steel		=	**4**
	As	=	24.63 [cm^2]

Section OK

Stirrup Design

$0.53\ \phi\ (fc')^{0.5}$ bd	=	22756	[kg]
L=Ln/2(Vu - ϕ Vc)/Vu	=	189.4	[cm]
S	=	28.048	[cm]

Used Stirrup 1 DB12 @ 0.250 OK

For Negative Moment :

Upper Steel	DB28
Lower Steel	DB28
Stirrup Steel	DB12

	d	=	85 [cm]
	a try	=	8.7110 [cm]
	As	=	20.248 [cm^2]
	a	=	**9.0747** [cm]
	ϕ Bend	=	0.90
	ϕ Shea	=	0.85
	k1	=	1.05
	Es	=	2040000 [kg/cm^2]
	Ec	=	284553 [kg/cm^2]
	n	=	7
	ρ	=	0.0472
	ρ_{max}	=	0.0354
	As	=	90.303 [cm^2]
	a	=	40.472 [cm]
	Mu	=	210543 [kg-m]
	M1	=	0 [kg-m]
	As'	=	0.0000 [cm^2]
No. of steel		=	**2**
	As	=	12.32 [cm^2]
	Σ As	=	20.248 [cm^2]
No. of steel		=	**4**
	As	=	24.63 [cm^2]

Section OK

Check Deflection

Δ all	=	2.22 [cm]			
ρ fy	=	39	>	35	[kg/cm^2]
Y'	=	26			
I	=	775920	[cm^4]		
Ec	=	284116	[kg/cm^2]		
Δ	=	2.22 [cm]	<	Δ all	OK
Δ Time	=	0.99	<	Δ all	OK

KINGDOM OF THAILAND
CHOKCHAI KHATKHAJORN
โชคชัย ขัดขจร
สย. 4522
REGISTERED PROFESSIONAL ENGINEER

DYNAMIC ENGINEERING CONSULTANT CO., LTD.

RC-I EXCEL — Ultimate Stress Design method in accordance with ACI 318-89

Design Reinforced Concrete Beam

Project	อาคารทิศตะวันออก โซน ซี	Beam Code	MB-1
Engineer	CKJ	File Name	Beam MB
		Date	29 Jun 20

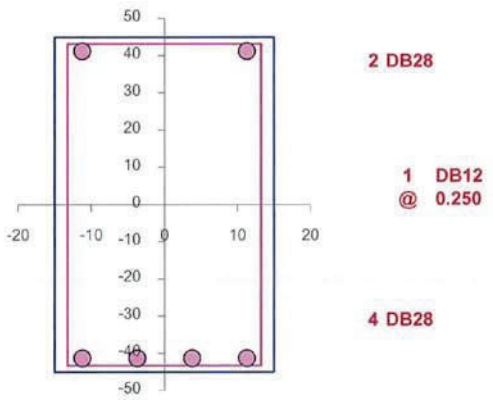

Positive Section
MB-1 (30 X 90)

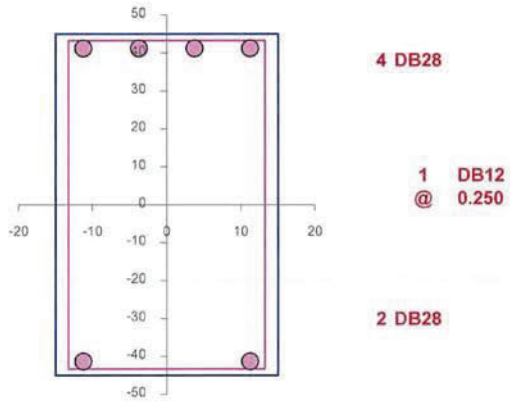

Negative Section
MB-1 (30 X 90)

KINGDOM OF THAILAND
CHOKCHAI KHATKHAJORN
โชคชัย ขัดขจร
สย. 4522
REGISTERED PROFESSIONAL ENGINEER

DYNAMIC ENGINEERING CONSULTANT CO., LTD.

RC-I EXCEL — **Ultimate Stress Design method in accordance with ACI 318-89**

Design Reinforced Concrete Beam

Project	อาคารทิศตะวันออก โซน ซี	**Beam Code**	MB-1C
Engineer	CKJ	**File Name**	Beam MB
		Date	29 Jun 20

	fc'	=	350	[kg/cm^2]
	fy SD	=	4000	[kg/cm^2]
	fy SD	=	4000	[kg/cm^2]
$M_{-pos.}$	Mu^+	=	0	[kg-m]
$M_{-neg.}$	Mu^-	=	185576	[kg-m]
$V_{max.}$	Vu	=	64740	[kg]
	DL	=	2385	[kg/m]
	LL	=	6800	[kg/m]
Length	Ln	=	400	[cm]
width	b	=	30	[cm]
depth	t	=	90	[cm]
	d'	=	5	[cm]
siding	d"	=	3.5	[cm]

For Positive Moment :

Upper Steel	DB28
Lower Steel	DB28
Stirrup Steel	DB12

	d	=	85	[cm]
	a try	=	0.0000	[cm]
	As	=	0.000	[cm^2]
	a	=	**0.0000**	[cm]
	ϕ Bend	=	0.90	
	ϕ Shea	=	0.85	
	k1	=	0.80	
	Es	=	2040000	[kg/cm^2]
	Ec	=	284553	[kg/cm^2]
	n	=	7	
	ρ	=	0.0360	
	ρ_{max}	=	0.0270	
	As	=	68.803	[cm^2]
	a	=	30.836	[cm]
	Mu	=	172347	[kg-m]
	M1	=	0	[kg-m]
	As'	=	0.0000	[cm^2]
No. of steel		=	**2**	
	As	=	12.32	[cm^2]
	Σ As	=	0.000	[cm^2]
No. of steel		=	**2**	
	As	=	12.32	[cm^2]

Section OK

Stirrup Design

$0.53\ \phi\ (fc')^{0.5}$ bd	=	22756	[kg]	
L=Ln/2(Vu - ϕ Vc)/Vu	=	140.2	[cm]	
S	=	21.250	[cm]	
Used Stirrup	2	DB12 @ 0.200		OK

For Negative Moment :

Upper Steel	DB28
Lower Steel	DB28
Stirrup Steel	DB12

	d	=	85	[cm]
	a try	=	8.7110	[cm]
	As	=	63.921	[cm^2]
	a	=	**28.6481**	[cm]
	ϕ Bend	=	0.90	
	ϕ Shea	=	0.85	
	k1	=	1.05	
	Es	=	2040000	[kg/cm^2]
	Ec	=	284553	[kg/cm^2]
	n	=	7	
	ρ	=	0.0472	
	ρ_{max}	=	0.0354	
	As	=	90.303	[cm^2]
	a	=	40.472	[cm]
	Mu	=	210543	[kg-m]
	M1	=	0	[kg-m]
	As'	=	0.0000	[cm^2]
No. of steel		=	**2**	
	As	=	12.32	[cm^2]
	Σ As	=	63.921	[cm^2]
No. of steel		=	**11**	
	As	=	67.73	[cm^2]

Section OK

Check Deflection

Δ all	=	1.11	[cm]		
ρ fy	=	19	<	35	[kg/cm^2]
Y'	=	19.4			
I	=	1535313	[cm^4]		
Ec	=	284116	[kg/cm^2]		
Δ	=	0.07 [cm]	<	Δ all	OK
Δ Time	=	0.03	<	Δ all	OK

KINGDOM OF THAILAND
CHOKCHAI KHATKHAJORN
โชคชัย ขัดขจร
สย. 4522
REGISTERED PROFESSIONAL ENGINEER

DYNAMIC ENGINEERING CONSULTANT CO., LTD.

RC-I EXCEL — **Ultimate Stress Design method in accordance with ACI 318-89**

Design Reinforced Concrete Beam

Project	อาคารทิศตะวันออก โซน ซี	**Beam Code**	MB-1C
Engineer	CKJ	**File Name**	Beam MB
		Date	29 Jun 20

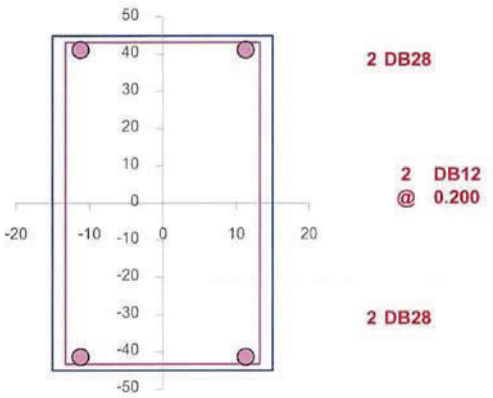

Positive Section

MB-1C (30 X 90)

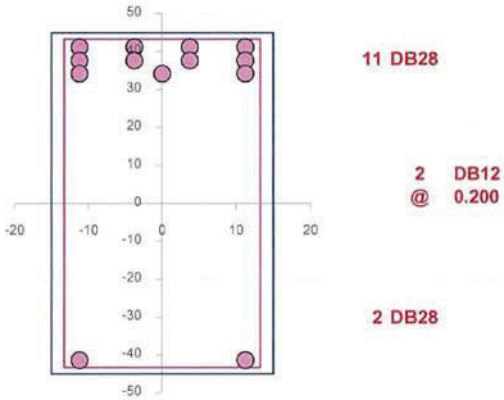

Negative Section

MB-1C (30 X 90)

KINGDOM OF THAILAND
CHOKCHAI KHATKHAJORN
โชคชัย ขัดขจร
สย. 4522
REGISTERED PROFESSIONAL ENGINEER

DYNAMIC ENGINEERING CONSULTANT CO., LTD.

RC-I EXCEL — **Ultimate Stress Design method in accordance with ACI 318-89**

Design Reinforced Concrete Beam

Project	อาคารทิศตะวันออก โซน ซี	**Beam Code**	MB-2
Engineer	CKJ	**File Name**	Beam MB
		Date	13 Aug 20

	fc'	=	350	[kg/cm²]
	fy SD	=	4000	[kg/cm²]
	fy SD	=	4000	[kg/cm²]
$M_{-pos.}$	Mu^+	=	69000	[kg-m]
$M_{-neg.}$	Mu^-	=	69000	[kg-m]
$V_{max.}$	Vu	=	45696	[kg]
	DL	=	2720	[kg/m]
	LL	=	6000	[kg/m]
Length	Ln	=	800	[cm]
width	b	=	30	[cm]
depth	t	=	90	[cm]
	d'	=	5	[cm]
siding	d"	=	3.5	[cm]

For Positive Moment :

Upper Steel	DB28
Lower Steel	DB28
Stirrup Steel	DB12

d	=	85	[cm]
a try	=	10.7909	[cm]
As	=	24.077	[cm²]
a	=	**10.7910**	[cm]
ϕ Bend	=	0.90	
ϕ Shea	=	0.85	
k1	=	0.80	
Es	=	2040000	[kg/cm²]
Ec	=	284553	[kg/cm²]
n	=	7	
ρ	=	0.0360	
ρ_{max}	=	0.0270	
As	=	68.803	[cm²]
a	=	30.836	[cm]
Mu	=	172347	[kg-m]
M1	=	0	[kg-m]
As'	=	0.0000	[cm²]
No. of steel	=	**2**	
As	=	12.32	[cm²]
Σ As	=	24.077	[cm²]
No. of steel	=	**4**	
As	=	24.63	[cm²]

Section OK

For Negative Moment :

Upper Steel	DB28
Lower Steel	DB28
Stirrup Steel	DB12

d	=	85	[cm]
a try	=	8.7110	[cm]
As	=	23.767	[cm²]
a	=	**10.6518**	[cm]
ϕ Bend	=	0.90	
ϕ Shea	=	0.85	
k1	=	1.05	
Es	=	2040000	[kg/cm²]
Ec	=	284553	[kg/cm²]
n	=	7	
ρ	=	0.0472	
ρ_{max}	=	0.0354	
As	=	90.303	[cm²]
a	=	40.472	[cm]
Mu	=	210543	[kg-m]
M1	=	0	[kg-m]
As'	=	0.0000	[cm²]
No. of steel	=	**2**	
As	=	12.32	[cm²]
Σ As	=	23.767	[cm²]
No. of steel	=	**4**	
As	=	24.63	[cm²]

Section OK

KINGDOM OF THAILAND
CHOKCHAI KHATKHAJORN
โชคชัย ขัดขจร
สย. 4522
REGISTERED PROFESSIONAL ENGINEER

Stirrup Design

$0.53\ \phi\ (fc')^{0.5}\ bd$	=	22756	[kg]	
L=Ln/2(Vu - ϕ Vc)/Vu	=	230.7	[cm]	
S	=	28.496	[cm]	
Used Stirrup	1	DB12 @ 0.250		OK

Check Deflection

Δ all	=	2.22	[cm]	
ρ fy	=	39 > 35	[kg/cm²]	
Y'	=	26		
I	=	775920	[cm⁴]	
Ec	=	284116	[kg/cm²]	
Δ	=	2.11 [cm]	<	Δ all **OK**
Δ Time	=	0.99	<	Δ all **OK**

DYNAMIC ENGINEERING CONSULTANT CO., LTD.

RC-I EXCEL — **Ultimate Stress Design method in accordance with ACI 318-89**

Design Reinforced Concrete Beam

Project	อาคารทิศตะวันออก โซน ซี	**Beam Code**	MB-2
Engineer	CKJ	**File Name**	Beam MB
		Date	13 Aug 20

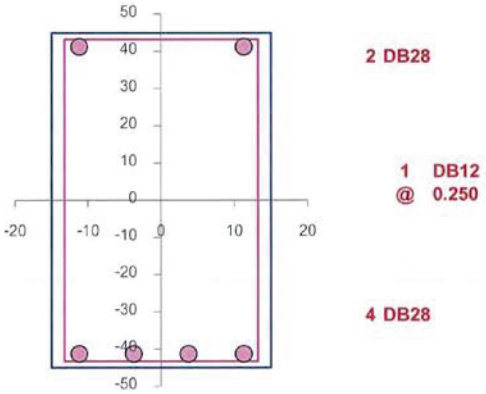

Positive Section

MB-2 (30 X 90)

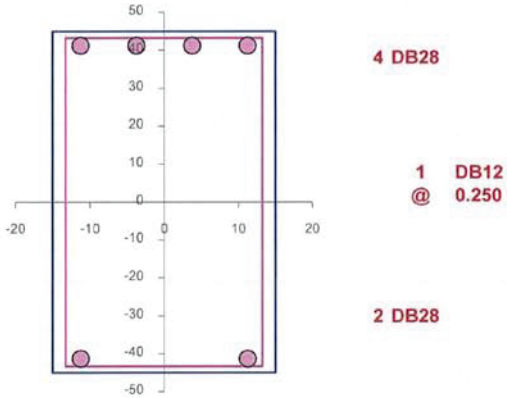

Negative Section

MB-2 (30 X 90)

KINGDOM OF THAILAND
CHOKCHAI KHATKHAJORN
โชคชัย ขัดขจร
สย. 4522
REGISTERED PROFESSIONAL ENGINEER

DYNAMIC ENGINEERING CONSULTANT CO., LTD.	Job No.	193018
Design Reinforced Concrete Beam	Rev.	1
(Ultimate Stress Design method in accordance with ACI 318-89)	Initial	CKJ
Beam No. MB-2A	Date	13-Aug-20
Project : อาคารทิศตะวันออก	File	Beam MB

	fc'	=	350	[kg/cm^2]
	fy SD	=	4000	[kg/cm^2]
	fy SR	=	2400	[kg/cm^2]
$M_{-pos.}$	Mu^+	=	34000	[kg-m]
$M_{-neg.}$	Mu^-	=	34000	[kg-m]
$V_{max.}$	Vu	=	27200	[kg]
	DL	=	2720	[kg/m]
	LL	=	6000	[kg/m]
Length	Ln	=	500	[cm]
width	b	=	30	[cm]
depth	t	=	90	[cm]
	d'	=	5	[cm]
siding	d"	=	3.5	[cm]

For Positive Moment :

Upper Steel	DB 20
Lower Steel	DB 20
Stirrup Steel	RB 9

	d	=	85 [cm]
	a try	=	5.1348 [cm]
	As	=	11.457 [cm^2]
	a	=	**5.1349** [cm]
	ϕ Bend	=	0.90
	ϕ Shea	=	0.85
	k1	=	0.80
	Es	=	2040000 [kg/cm^2]
	Ec	=	284553 [kg/cm^2]
	n	=	7
	ρ	=	0.0360
	ρ_{max}	=	0.0270
	As	=	68.803 [cm^2]
	a	=	30.836 [cm]
	Mu	=	172347 [kg-m]
	M1	=	0 [kg-m]
	As'	=	0.0000 [cm^2]
	No. of steel	=	**2**
	As	=	6.28 [cm^2]
	Σ As	=	11.457 [cm^2]
	No. of steel	=	**4**
	As	=	12.57 [cm^2]

Section OK

Stirrup Design

0.53 ϕ (fc')$^{0.5}$ bd	=	22756	[kg]
L=Ln/2(Vu - ϕ Vc)/Vu	=	72.2	[cm]
S	=	42.500	[cm]
Used Stirrup		**RB 9 @ 0.400**	**OK**

For Negative Moment :

Upper Steel	DB 20
Lower Steel	DB 20
Stirrup Steel	RB 9

	d	=	85 [cm]
	a try	=	8.7110 [cm]
	As	=	11.457 [cm^2]
	a	=	**5.1349** [cm]
	ϕ Bend	=	0.90
	ϕ Shea	=	0.85
	k1	=	1.05
	Es	=	2040000 [kg/cm^2]
	Ec	=	284553 [kg/cm^2]
	n	=	7
	ρ	=	0.0472
	ρ_{max}	=	0.0354
	As	=	90.303 [cm^2]
	a	=	40.472 [cm]
	Mu	=	210543 [kg-m]
	M1	=	0 [kg-m]
	As'	=	0.0000 [cm^2]
	No. of steel	=	**2**
	As	=	6.28 [cm^2]
	Σ As	=	11.457 [cm^2]
	No. of steel	=	**4**
	As	=	12.57 [cm^2]

Section OK

Check Deflection

Δ all	=	1.39 [cm]		
ρ fy	=	20	<	35 [kg/cm^2]
Y'	=	19.6		
I	=	1535313 [cm^4]		
Ec	=	284116 [kg/cm^2]		
Δ	=	0.16 [cm]	<	Δ all **OK**
Δ Time	=	0.08	<	Δ all **OK**

KINGDOM OF THAILAND
CHOKCHAI KHATKHAJORN
โชคชัย ขัดขจร
สย. 4522
REGISTERED PROFESSIONAL ENGINEER

DYNAMIC ENGINEERING CONSULTANT CO., LTD.	Job No.	193018
Design Reinforced Concrete Beam	Rev.	1
(Ultimate Stress Design method in accordance with ACI 318-89)	Initial	CKJ
Beam No. MB-2A	Date	13-Aug-20
Project : อาคารทิศตะวันออก	File	Beam MB

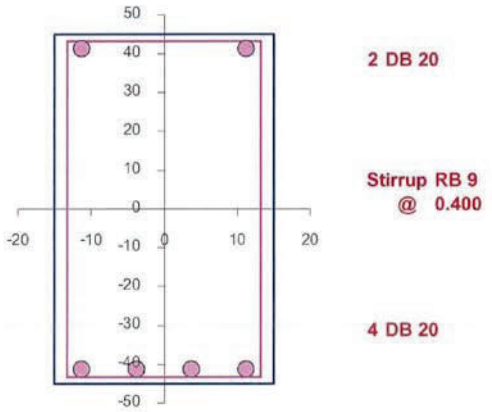

Positive Section
MB-2A (30 X 90)

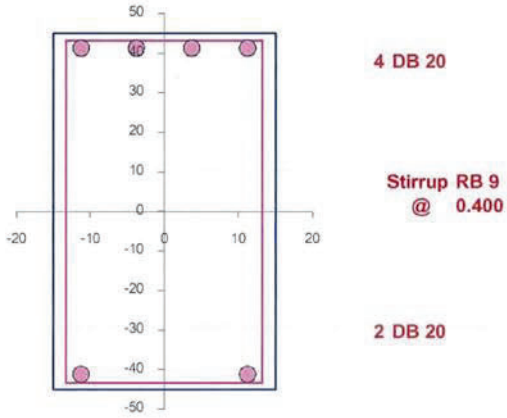

Negative Section
MB-2A (30 X 90)

KINGDOM OF THAILAND
CHOKCHAI KHATKHAJORN
โชคชัย ขัดขจร
สย. 4522
REGISTERED PROFESSIONAL ENGINEER

DYNAMIC ENGINEERING CONSULTANT CO., LTD.

RC-I EXCEL — Ultimate Stress Design method in accordance with ACI 318-89

Design Reinforced Concrete Beam

Project	อาคารทิศตะวันออก โซน ซี	Beam Code	MB-3
Engineer	CKJ	File Name	Beam MB
		Date	29 Jun 20

	fc'	=	350	[kg/cm^2]
	fy SD	=	4000	[kg/cm^2]
	fy SD	=	2400	[kg/cm^2]
$M_{-pos.}$	Mu$^+$	=	117000	[kg-m]
$M_{-neg.}$	Mu$^-$	=	117000	[kg-m]
$V_{max.}$	Vu	=	51500	[kg]
	DL	=	3570	[kg/m]
	LL	=	5950	[kg/m]
Length	Ln	=	800	[cm]
width	b	=	40	[cm]
depth	t	=	100	[cm]
	d'	=	5	[cm]
siding	d''	=	3.5	[cm]

For Positive Moment :

Upper Steel: DB28
Lower Steel: DB28
Stirrup Steel: DB12

d	=	95	[cm]
a try	=	12.2945	[cm]
As	=	36.577	[cm^2]
a	=	**12.2949**	[cm]
ϕ Bend	=	0.90	
ϕ Shea	=	0.85	
k1	=	0.80	
Es	=	2040000	[kg/cm^2]
Ec	=	284553	[kg/cm^2]
n	=	7	
ρ	=	0.0360	
ρ_{max}	=	0.0270	
As	=	102.529	[cm^2]
a	=	34.464	[cm]
Mu	=	287047	[kg-m]
M1	=	0	[kg-m]
As'	=	0.0000	[cm^2]
No. of steel	=	**2**	
As	=	12.32	[cm^2]
Σ As	=	36.577	[cm^2]
No. of steel	=	**6**	
As	=	36.95	[cm^2]

Section OK

Stirrup Design

$0.53\,\phi\,(fc')^{0.5}$ bd	=	33911	[kg]	
L=Ln/2(Vu - ϕ Vc)/Vu	=	176.1	[cm]	
S	=	47.500	[cm]	
Used Stirrup	2	DB12 @ 0.400		OK

For Negative Moment :

Upper Steel: DB28
Lower Steel: DB28
Stirrup Steel: DB12

d	=	95	[cm]
a try	=	8.7110	[cm]
As	=	35.854	[cm^2]
a	=	**12.0519**	[cm]
ϕ Bend	=	0.90	
ϕ Shea	=	0.85	
k1	=	1.05	
Es	=	2040000	[kg/cm^2]
Ec	=	284553	[kg/cm^2]
n	=	7	
ρ	=	0.0472	
ρ_{max}	=	0.0354	
As	=	134.570	[cm^2]
a	=	45.234	[cm]
Mu	=	350662	[kg-m]
M1	=	0	[kg-m]
As'	=	0.0000	[cm^2]
No. of steel	=	**2**	
As	=	12.32	[cm^2]
Σ As	=	35.854	[cm^2]
No. of steel	=	**6**	
As	=	36.95	[cm^2]

Section OK

Check Deflection

Δ all	=	2.22	[cm]		
ρ fy	=	39	>	35	[kg/cm^2]
Y'	=	29.2			
I	=	1451674	[cm^4]		
Ec	=	284116	[kg/cm^2]		
Δ	=	1.23	[cm] <	Δ all	OK
Δ Time	=	1.54	<	Δ all	OK

KINGDOM OF THAILAND
CHOKCHAI KHATKHAJORN
โชคชัย ขัดขจร
สย. 4522
REGISTERED PROFESSIONAL ENGINEER

DYNAMIC ENGINEERING CONSULTANT CO., LTD.

RC-I EXCEL — Ultimate Stress Design method in accordance with ACI 318-89

Design Reinforced Concrete Beam

Project	อาคารทิศตะวันออก โซน ซี	Beam Code	MB-3
Engineer	CKJ	File Name	Beam MB
		Date	29 Jun 20

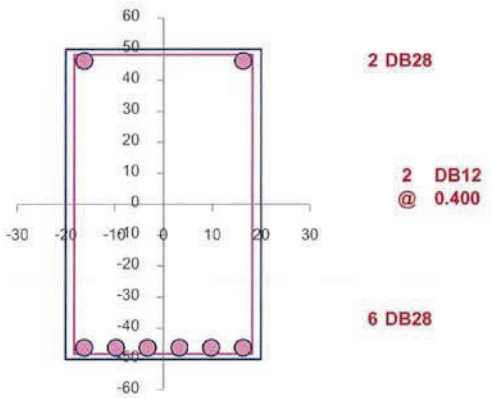

Positive Section
MB-3 (40 X 100)

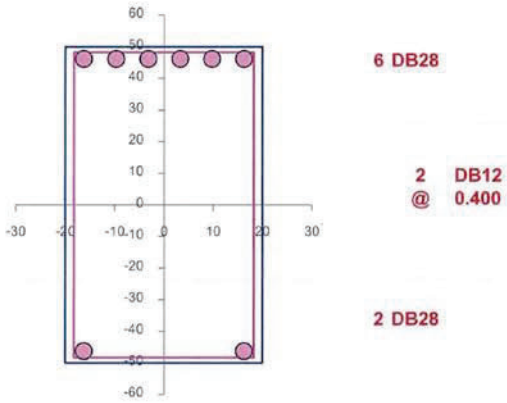

Negative Section
MB-3 (40 X 100)

KINGDOM OF THAILAND
CHOKCHAI KHATKHAJORN
โชคชัย ขัดขจร
สย. 4522
REGISTERED PROFESSIONAL ENGINEER

DYNAMIC ENGINEERING CONSULTANT CO., LTD.

RC-I EXCEL — Ultimate Stress Design method in accordance with ACI 318-89

Design Reinforced Concrete Beam

Project	อาคารทิศตะวันออก โซน ซี	Beam Code	MB-3A
Engineer	CKJ	File Name	Beam MB
		Date	29 Jun 20

	fc'	=	350	[kg/cm^2]
	fy SD	=	4000	[kg/cm^2]
	fy SD	=	2400	[kg/cm^2]
$M_{-pos.}$	Mu^+	=	161600	[kg-m]
$M_{-neg.}$	Mu^-	=	161600	[kg-m]
$V_{max.}$	Vu	=	57950	[kg]
	DL	=	2825	[kg/m]
	LL	=	5950	[kg/m]
Length	Ln	=	800	[cm]
width	b	=	40	[cm]
depth	t	=	100	[cm]
	d'	=	5	[cm]
siding	d"	=	3.5	[cm]

For Positive Moment :

Upper Steel: DB28
Lower Steel: DB28
Stirrup Steel: DB12

d	=	95	[cm]
a try	=	17.4924	[cm]
As	=	52.043	[cm^2]
a	=	**17.4934**	[cm]
ϕ Bend	=	0.90	
ϕ Shea	=	0.85	
k1	=	0.80	
Es	=	2040000	[kg/cm^2]
Ec	=	284553	[kg/cm^2]
n	=	7	
ρ	=	0.0360	
ρ_{max}	=	0.0270	
As	=	102.529	[cm^2]
a	=	34.464	[cm]
Mu	=	287047	[kg-m]
M1	=	0	[kg-m]
As'	=	0.0000	[cm^2]
No. of steel	=	**2**	
As	=	12.32	[cm^2]
Σ As	=	52.043	[cm^2]
No. of steel	=	**9**	
As	=	55.42	[cm^2]

Section OK

For Negative Moment :

Upper Steel: DB28
Lower Steel: DB28
Stirrup Steel: DB12

d	=	95	[cm]
a try	=	8.7110	[cm]
As	=	49.522	[cm^2]
a	=	**16.6460**	[cm]
ϕ Bend	=	0.90	
ϕ Shea	=	0.85	
k1	=	1.05	
Es	=	2040000	[kg/cm^2]
Ec	=	284553	[kg/cm^2]
n	=	7	
ρ	=	0.0472	
ρ_{max}	=	0.0354	
As	=	134.570	[cm^2]
a	=	45.234	[cm]
Mu	=	350662	[kg-m]
M1	=	0	[kg-m]
As'	=	0.0000	[cm^2]
No. of steel	=	**2**	
As	=	12.32	[cm^2]
Σ As	=	49.522	[cm^2]
No. of steel	=	**9**	
As	=	55.42	[cm^2]

Section OK

KINGDOM OF THAILAND
CHOKCHAI KHATKHAJORN
โชคชัย ขัดขจร
สย. 4522
REGISTERED PROFESSIONAL ENGINEER

Stirrup Design

$0.53\ \phi\ (fc')^{0.5}$ bd	=	33911	[kg]	
L=Ln/2(Vu - ϕ Vc)/Vu	=	201.0	[cm]	
S	=	36.471	[cm]	
Used Stirrup	2	DB12 @ 0.360		OK

Check Deflection

Δ all	=	2.22	[cm]	
ρ fy	=	58 > 35	[kg/cm^2]	
Y'	=	34.3		
I	=	1967350	[cm^4]	
Ec	=	284116	[kg/cm^2]	
Δ	=	0.84 [cm] <	Δ all	OK
Δ Time	=	0.99 <	Δ all	OK

DYNAMIC ENGINEERING CONSULTANT CO., LTD.

RC-I EXCEL — Ultimate Stress Design method in accordance with ACI 318-89

Design Reinforced Concrete Beam

Project	อาคารทิศตะวันออก โซน ซี	Beam Code	MB-3A
Engineer	CKJ	File Name	Beam MB
		Date	29 Jun 20

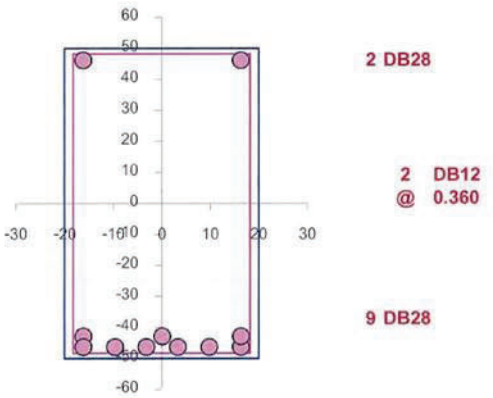

Positive Section
MB-3A (40 X 100)

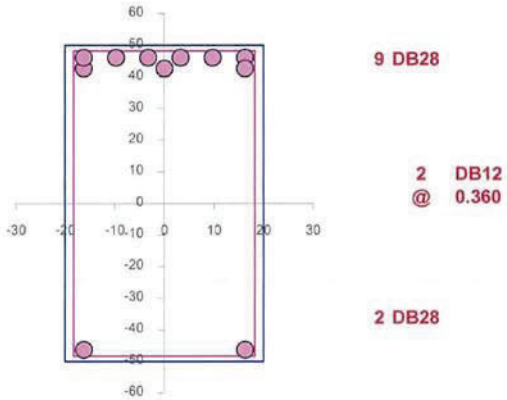

Negative Section
MB-3A (40 X 100)

KINGDOM OF THAILAND
CHOKCHAI KHATKHAJORN
โชคชัย ขัดขจร
สย. 4522
REGISTERED PROFESSIONAL ENGINEER

DYNAMIC ENGINEERING CONSULTANT CO., LTD.

RC-I EXCEL — **Ultimate Stress Design method in accordance with ACI 318-89**

Design Reinforced Concrete Beam

Project	อาคารทิศตะวันออก โซน ซี	**Beam Code**	MB-3B
Engineer	CKJ	**File Name**	Beam MB
		Date	29 Jun 20

	fc'	=	350	[kg/cm^2]
	fy SD	=	4000	[kg/cm^2]
	fy SD	=	2400	[kg/cm^2]
$M_{-pos.}$	Mu^+	=	35487	[kg-m]
$M_{-neg.}$	Mu^-	=	35487	[kg-m]
$V_{max.}$	Vu	=	57593	[kg]
	DL	=	2875	[kg/m]
	LL	=	5950	[kg/m]
Length	Ln	=	420	[cm]
width	b	=	40	[cm]
depth	t	=	100	[cm]
	d'	=	5	[cm]
siding	d"	=	3.5	[cm]

For Positive Moment :

Upper Steel: DB25
Lower Steel: DB25
Stirrup Steel: DB12

d	=	95	[cm]
a try	=	3.5543	[cm]
As	=	10.574	[cm^2]
a	=	**3.5543**	[cm]
ϕ Bend	=	0.90	
ϕ Shea	=	0.85	
k1	=	0.80	
Es	=	2040000	[kg/cm^2]
Ec	=	284553	[kg/cm^2]
n	=	7	
ρ	=	0.0360	
ρ_{max}	=	0.0270	
As	=	102.529	[cm^2]
a	=	34.464	[cm]
Mu	=	287047	[kg-m]
M1	=	0	[kg-m]
As'	=	0.0000	[cm^2]
No. of steel	=	**2**	
As	=	9.82	[cm^2]
Σ As	=	10.574	[cm^2]
No. of steel	=	**3**	
As	=	14.73	[cm^2]

Section OK

Stirrup Design

$0.53\ \phi\ (fc')^{0.5}\ bd$	=	33911	[kg]
L=Ln/2(Vu - ϕ Vc)/Vu	=	104.9	[cm]
S	=	18.510	[cm]

Used Stirrup 1 DB12 @ 0.175 OK

For Negative Moment :

Upper Steel: DB25
Lower Steel: DB25
Stirrup Steel: DB12

d	=	95	[cm]
a try	=	8.7110	[cm]
As	=	10.875	[cm^2]
a	=	**3.6554**	[cm]
ϕ Bend	=	0.90	
ϕ Shea	=	0.85	
k1	=	1.05	
Es	=	2040000	[kg/cm^2]
Ec	=	284553	[kg/cm^2]
n	=	7	
ρ	=	0.0472	
ρ_{max}	=	0.0354	
As	=	134.570	[cm^2]
a	=	45.234	[cm]
Mu	=	350662	[kg-m]
M1	=	0	[kg-m]
As'	=	0.0000	[cm^2]
No. of steel	=	**2**	
As	=	9.82	[cm^2]
Σ As	=	10.875	[cm^2]
No. of steel	=	**3**	
As	=	14.73	[cm^2]

Section OK

Check Deflection

Δ all	=	1.17	[cm]		
ρ fy	=	16	<	35	[kg/cm^2]
Y'	=	19.7			
I	=	2857917	[cm^4]		
Ec	=	284116	[kg/cm^2]		
Δ	=	0.04	[cm] <	Δ all	OK
Δ Time	=	0.01	<	Δ all	OK

KINGDOM OF THAILAND
CHOKCHAI KHATKHAJORN
โชคชัย ขัดขจร
สย. 4522
REGISTERED PROFESSIONAL ENGINEER

DYNAMIC ENGINEERING CONSULTANT CO., LTD.

RC-I EXCEL — Ultimate Stress Design method in accordance with ACI 318-89

Design Reinforced Concrete Beam

Project	อาคารทิศตะวันออก โซน ซี	Beam Code	MB-3B
Engineer	CKJ	File Name	Beam MB
		Date	29 Jun 20

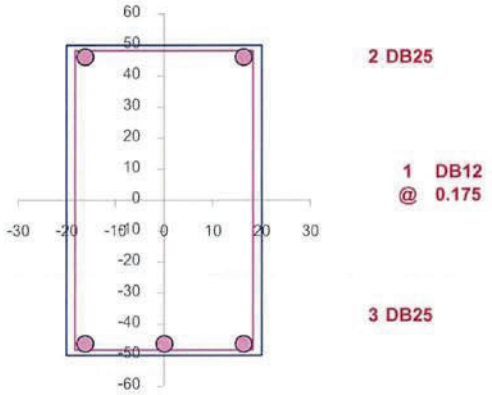

Positive Section

MB-3B (40 X 100)

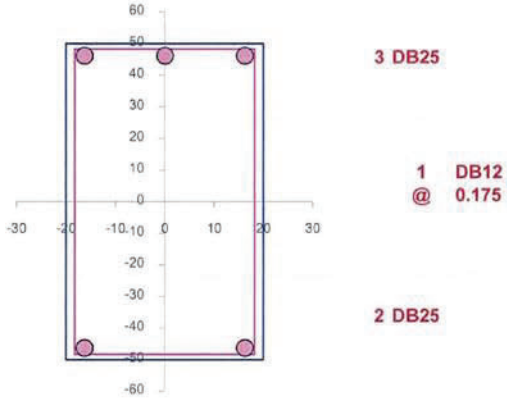

Negative Section

MB-3B (40 X 100)

KINGDOM OF THAILAND
CHOKCHAI KHATKHAJORN
โชคชัย ขัดขจร
สย. 4522
REGISTERED PROFESSIONAL ENGINEER

DYNAMIC ENGINEERING CONSULTANT CO., LTD.

RC-I EXCEL — Ultimate Stress Design method in accordance with ACI 318-89

Design Reinforced Concrete Beam

Project	อาคารทิศตะวันออก โซน ซี	Beam Code	MB-3C
Engineer	CKJ	File Name	Beam MB
		Date	29 Jun 20

	fc'	=	350	[kg/cm^2]
	fy SD	=	4000	[kg/cm^2]
	fy SD	=	2400	[kg/cm^2]
$M_{-pos.}$	Mu$^+$	=	71350	[kg-m]
$M_{-neg.}$	Mu$^-$	=	142700	[kg-m]
$V_{max.}$	Vu	=	54675	[kg]
	DL	=	3570	[kg/m]
	LL	=	5950	[kg/m]
Length	Ln	=	400	[cm]
width	b	=	40	[cm]
depth	t	=	100	[cm]
	d'	=	5	[cm]
siding	d"	=	3.5	[cm]

For Positive Moment :

Upper Steel: DB28
Lower Steel: DB28
Stirrup Steel: DB12

d	=	95	[cm]
a try	=	7.2921	[cm]
As	=	21.695	[cm^2]
a	=	**7.2925**	[cm]
ϕ Bend	=	0.90	
ϕ Shea	=	0.85	
k1	=	0.80	
Es	=	2040000	[kg/cm^2]
Ec	=	284553	[kg/cm^2]
n	=	7	
ρ	=	0.0360	
ρ_{max}	=	0.0270	
As	=	102.529	[cm^2]
a	=	34.464	[cm]
Mu	=	287047	[kg-m]
M1	=	0	[kg-m]
As'	=	0.0000	[cm^2]
No. of steel	=	**2**	
As	=	12.32	[cm^2]
Σ As	=	21.695	[cm^2]
No. of steel	=	**4**	
As	=	24.63	[cm^2]

Section OK

For Negative Moment :

Upper Steel: DB28
Lower Steel: DB28
Stirrup Steel: DB12

d	=	95	[cm]
a try	=	8.7110	[cm]
As	=	43.730	[cm^2]
a	=	**14.6992**	[cm]
ϕ Bend	=	0.90	
ϕ Shea	=	0.85	
k1	=	1.05	
Es	=	2040000	[kg/cm^2]
Ec	=	284553	[kg/cm^2]
n	=	7	
ρ	=	0.0472	
ρ_{max}	=	0.0354	
As	=	134.570	[cm^2]
a	=	45.234	[cm]
Mu	=	350662	[kg-m]
M1	=	0	[kg-m]
As'	=	0.0000	[cm^2]
No. of steel	=	**2**	
As	=	12.32	[cm^2]
Σ As	=	43.730	[cm^2]
No. of steel	=	**8**	
As	=	49.26	[cm^2]

Section OK

Stirrup Design

$0.53\,\phi\,(fc')^{0.5}\,bd$	=	33911	[kg]	
L=Ln/2(Vu - ϕ Vc)/Vu	=	94.6	[cm]	
S	=	42.223	[cm]	
Used Stirrup	2	DB12 @ 0.400		OK

Check Deflection

Δ all	=	1.11	[cm]		
ρ fy	=	26	<	35	[kg/cm^2]
Y'	=	24.6			
I	=	2857917	[cm^4]		
Ec	=	284116	[kg/cm^2]		
Δ	=	0.04 [cm]	<	Δ all	OK
Δ Time	=	0.02	<	Δ all	OK

KINGDOM OF THAILAND
CHOKCHAI KHATKHAJORN
โชคชัย ขัดขจร
สย. 4522
REGISTERED PROFESSIONAL ENGINEER

DYNAMIC ENGINEERING CONSULTANT CO., LTD.

RC-I EXCEL — Ultimate Stress Design method in accordance with ACI 318-89

Design Reinforced Concrete Beam

Project	อาคารทิศตะวันออก โซน ซี	Beam Code	MB-3C
Engineer	CKJ	File Name	Beam MB
		Date	29 Jun 20

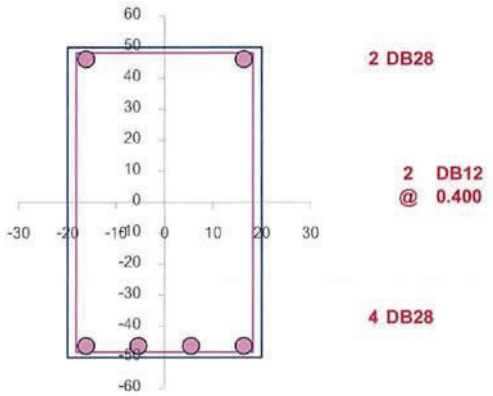

Positive Section
MB-3C (40 X 100)

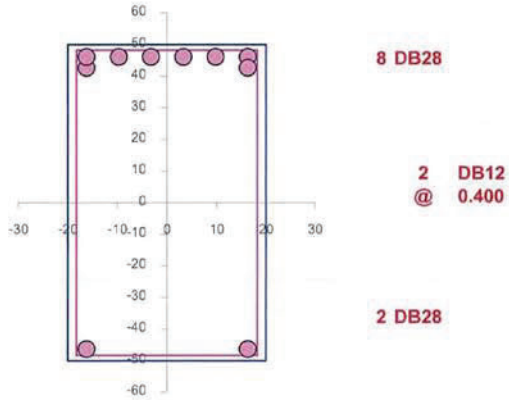

Negative Section
MB-3C (40 X 100)

KINGDOM OF THAILAND
CHOKCHAI KHATKHAJORN
โชคชัย ขัดขจร
สย. 4522
REGISTERED PROFESSIONAL ENGINEER

DYNAMIC ENGINEERING CONSULTANT CO., LTD.

RC-I EXCEL — Ultimate Stress Design method in accordance with ACI 318-89

Design Reinforced Concrete Beam

Project	อาคารทิศตะวันออก โซน ซี	Beam Code	MB-4
Engineer	CKJ	File Name	Beam MB
		Date	30 Jun 20

	fc'	=	350	[kg/cm²]
	fy SD	=	4000	[kg/cm²]
	fy SD	=	2400	[kg/cm²]
$M_{-pos.}$	Mu^+	=	220150	[kg-m]
$M_{-neg.}$	Mu^-	=	220150	[kg-m]
$V_{max.}$	Vu	=	83350	[kg]
	DL	=	2755	[kg/m]
	LL	=	6800	[kg/m]
Length	Ln	=	800	[cm]
width	b	=	40	[cm]
depth	t	=	100	[cm]
	d'	=	5	[cm]
siding	d''	=	3.5	[cm]

For Positive Moment :

Upper Steel	DB28
Lower Steel	DB28
Stirrup Steel	DB12

d	=	95	[cm]
a try	=	24.9008	[cm]
As	=	74.080	[cm²]
a	=	**24.9009**	[cm]
ϕ Bend	=	0.90	
ϕ Shea	=	0.85	
k1	=	0.80	
Es	=	2040000	[kg/cm²]
Ec	=	284553	[kg/cm²]
n	=	7	
ρ	=	0.0360	
ρ_{max}	=	0.0270	
As	=	102.529	[cm²]
a	=	34.464	[cm]
Mu	=	287047	[kg-m]
M1	=	0	[kg-m]
As'	=	0.0000	[cm²]
No. of steel	=	**2**	
As	=	12.32	[cm²]
Σ As	=	74.080	[cm²]
No. of steel	=	**13**	
As	=	80.05	[cm²]

Section OK

For Negative Moment :

Upper Steel	DB28
Lower Steel	DB28
Stirrup Steel	DB12

d	=	95	[cm]
a try	=	8.7110	[cm]
As	=	67.464	[cm²]
a	=	**22.6771**	[cm]
ϕ Bend	=	0.90	
ϕ Shea	=	0.85	
k1	=	1.05	
Es	=	2040000	[kg/cm²]
Ec	=	284553	[kg/cm²]
n	=	7	
ρ	=	0.0472	
ρ_{max}	=	0.0354	
As	=	134.570	[cm²]
a	=	45.234	[cm]
Mu	=	350662	[kg-m]
M1	=	0	[kg-m]
As'	=	0.0000	[cm²]
No. of steel	=	**2**	
As	=	12.32	[cm²]
Σ As	=	67.464	[cm²]
No. of steel	=	**11**	
As	=	67.73	[cm²]

Section OK

Stirrup Design

$0.53\,\phi\,(fc')^{0.5}\,bd$	=	33911	[kg]	
L=Ln/2(Vu - ϕ Vc)/Vu	=	261.7	[cm]	
S	=	17.733	[cm]	
Used Stirrup	2	DB12 @ 0.175		OK

Check Deflection

Δ all	=	2.22	[cm]	
ρ fy	=	84 > 35	[kg/cm²]	
Y'	=	39.4		
I	=	2547697	[cm⁴]	
Ec	=	284116	[kg/cm²]	
Δ	=	0.70 [cm] <	Δ all	OK
Δ Time	=	0.81 <	Δ all	OK

KINGDOM OF THAILAND
CHOKCHAI KHATKHAJORN
โชคชัย ขัดขจร
สย. 4522
REGISTERED PROFESSIONAL ENGINEER

DYNAMIC ENGINEERING CONSULTANT CO., LTD.

RC-I EXCEL — Ultimate Stress Design method in accordance with ACI 318-89

Design Reinforced Concrete Beam

Project	อาคารทิศตะวันออก โซน ซี	Beam Code	MB-4
Engineer	CKJ	File Name	Beam MB
		Date	30 Jun 20

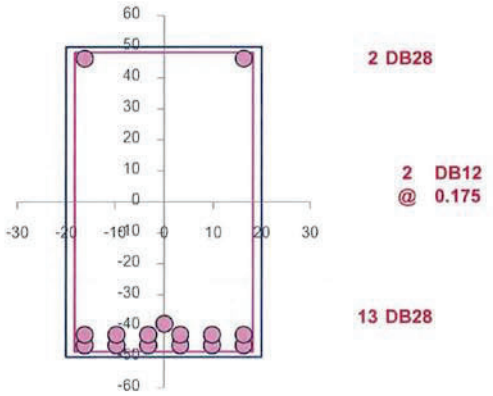

Positive Section
MB-4 (40 X 100)

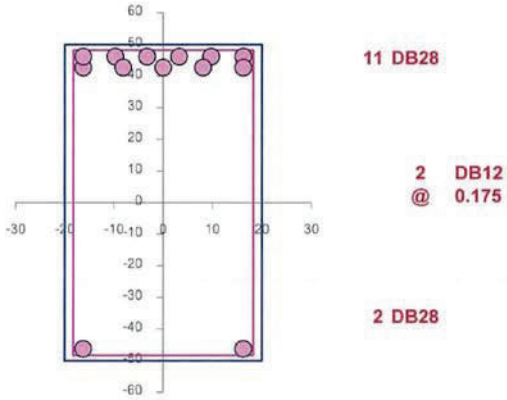

Negative Section
MB-4 (40 X 100)

KINGDOM OF THAILAND
CHOKCHAI KHATKHAJORN
โชคชัย ขัดขจร
สย. 4522
REGISTERED PROFESSIONAL ENGINEER

DYNAMIC ENGINEERING CONSULTANT CO., LTD.

RC-I EXCEL — Ultimate Stress Design method in accordance with ACI 318-89

Design Reinforced Concrete Beam

Project	อาคารทิศตะวันออก โซน ซี	Beam Code	MB-4A
Engineer	CKJ	File Name	Beam MB
		Date	30 Jun 20

	fc'	=	350	[kg/cm²]
	fy SD	=	4000	[kg/cm²]
	fy SD	=	2400	[kg/cm²]
$M_{-pos.}$	Mu^{+}	=	91575	[kg-m]
$M_{-neg.}$	Mu^{-}	=	91575	[kg-m]
$V_{max.}$	Vu	=	38250	[kg]
	DL	=	1750	[kg/m]
	LL	=	3400	[kg/m]
Length	Ln	=	600	[cm]
width	b	=	40	[cm]
depth	t	=	100	[cm]
	d'	=	5	[cm]
siding	d"	=	3.5	[cm]

KINGDOM OF THAILAND — CHOKCHAI KHATKHAJORN — โชคชัย ขัดขจร — สบ. 4522 — REGISTERED PROFESSIONAL ENGINEER

For Positive Moment :

Upper Steel: DB25
Lower Steel: DB25
Stirrup Steel: DB12

d	=	95	[cm]
a try	=	9.4728	[cm]
As	=	28.181	[cm²]
a	=	**9.4727**	[cm]
ϕ Bend	=	0.90	
ϕ Shea	=	0.85	
k1	=	0.80	
Es	=	2040000	[kg/cm²]
Ec	=	284553	[kg/cm²]
n	=	7	
ρ	=	0.0360	
ρ_{max}	=	0.0270	
As	=	102.529	[cm²]
a	=	34.464	[cm]
Mu	=	287047	[kg-m]
M1	=	0	[kg-m]
As'	=	0.0000	[cm²]
No. of steel	=	**2**	
As	=	9.82	[cm²]
Σ As	=	28.181	[cm²]
No. of steel	=	**6**	
As	=	29.45	[cm²]

Section OK

For Negative Moment :

Upper Steel: DB25
Lower Steel: DB25
Stirrup Steel: DB12

d	=	95	[cm]
a try	=	8.7110	[cm]
As	=	28.063	[cm²]
a	=	**9.4329**	[cm]
ϕ Bend	=	0.90	
ϕ Shea	=	0.85	
k1	=	1.05	
Es	=	2040000	[kg/cm²]
Ec	=	284553	[kg/cm²]
n	=	7	
ρ	=	0.0472	
ρ_{max}	=	0.0354	
As	=	134.570	[cm²]
a	=	45.234	[cm]
Mu	=	350662	[kg-m]
M1	=	0	[kg-m]
As'	=	0.0000	[cm²]
No. of steel	=	**2**	
As	=	9.82	[cm²]
Σ As	=	28.063	[cm²]
No. of steel	=	**6**	
As	=	29.45	[cm²]

Section OK

Stirrup Design

$0.53\ \phi\ (fc')^{0.5}\ bd$	=	33911	[kg]	
L=Ln/2(Vu - ϕ Vc)/Vu	=	73.9	[cm]	
S	=	47.500	[cm]	
Used Stirrup	1	DB12 @ 0.400		OK

Check Deflection

Δ all	=	1.67	[cm]	
ρ fy	=	31 < 35	[kg/cm²]	
Y'	=	26.6		
I	=	2857917	[cm⁴]	
Ec	=	284116	[kg/cm²]	
Δ	=	0.11 [cm]	<	Δ all OK
Δ Time	=	0.13	<	Δ all OK

DYNAMIC ENGINEERING CONSULTANT CO., LTD.

RC-I EXCEL — **Ultimate Stress Design method in accordance with ACI 318-89**

Design Reinforced Concrete Beam

Project	อาคารทิศตะวันออก โซน ซี	**Beam Code**	MB-4A
Engineer	CKJ	**File Name**	Beam MB
		Date	30 Jun 20

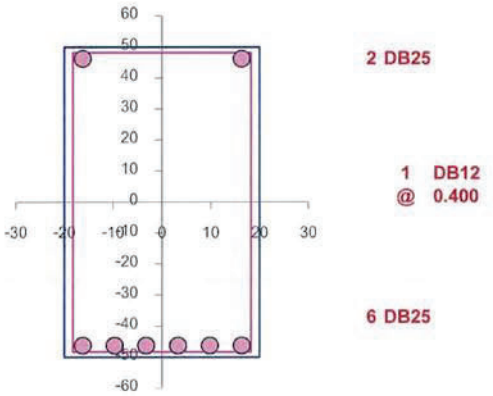

Positive Section

MB-4A (40 X 100)

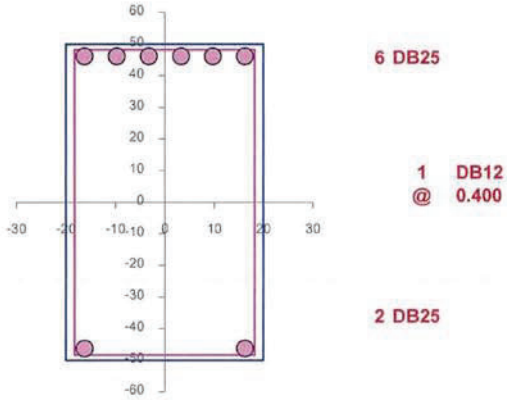

Negative Section

MB-4A (40 X 100)

KINGDOM OF THAILAND
CHOKCHAI KHATKHAJORN
โชคชัย ขัดขจร
สย. 4522
REGISTERED PROFESSIONAL ENGINEER

DYNAMIC ENGINEERING CONSULTANT CO., LTD.

RC-I EXCEL — Ultimate Stress Design method in accordance with ACI 318-89

Design Reinforced Concrete Beam

Project	อาคารทิศตะวันออก โซน ซี	Beam Code	MB-4C
Engineer	CKJ	File Name	Beam MB
		Date	29 Jun 20

	fc'	=	350	[kg/cm^2]
	fy SD	=	4000	[kg/cm^2]
	fy SD	=	2400	[kg/cm^2]
$M_{-pos.}$	Mu$^+$	=	99620	[kg-m]
$M_{-neg.}$	Mu$^-$	=	199240	[kg-m]
$V_{max.}$	Vu	=	68920	[kg]
	DL	=	2755	[kg/m]
	LL	=	6800	[kg/m]
Length	Ln	=	400	[cm]
width	b	=	40	[cm]
depth	t	=	100	[cm]
	d'	=	5	[cm]
siding	d"	=	3.5	[cm]

For Positive Moment :

Upper Steel: DB28
Lower Steel: DB28
Stirrup Steel: DB12

d	=	95	[cm]
a try	=	10.3556	[cm]
As	=	30.808	[cm^2]
a	=	**10.3556**	[cm]
ϕ Bend	=	0.90	
ϕ Shea	=	0.85	
k1	=	0.80	
Es	=	2040000	[kg/cm^2]
Ec	=	284553	[kg/cm^2]
n	=	7	
ρ	=	0.0360	
ρ_{max}	=	0.0270	
As	=	102.529	[cm^2]
a	=	34.464	[cm]
Mu	=	287047	[kg-m]
M1	=	0	[kg-m]
As'	=	0.0000	[cm^2]
No. of steel	=	**2**	
As	=	12.32	[cm^2]
Σ As	=	30.808	[cm^2]
No. of steel	=	**6**	
As	=	36.95	[cm^2]

Section OK

Stirrup Design

$0.53\,\phi\,(fc')^{0.5}$ bd	=	33911	[kg]
L=Ln/2(Vu - ϕ Vc)/Vu	=	116.4	[cm]
S	=	25.043	[cm]

Used Stirrup 2 DB12 @ 0.250 OK

For Negative Moment :

Upper Steel: DB28
Lower Steel: DB28
Stirrup Steel: DB12

d	=	95	[cm]
a try	=	8.7110	[cm]
As	=	61.057	[cm^2]
a	=	**20.5232**	[cm]
ϕ Bend	=	0.90	
ϕ Shea	=	0.85	
k1	=	1.05	
Es	=	2040000	[kg/cm^2]
Ec	=	284553	[kg/cm^2]
n	=	7	
ρ	=	0.0472	
ρ_{max}	=	0.0354	
As	=	134.570	[cm^2]
a	=	45.234	[cm]
Mu	=	350662	[kg-m]
M1	=	0	[kg-m]
As'	=	0.0000	[cm^2]
No. of steel	=	**2**	
As	=	12.32	[cm^2]
Σ As	=	61.057	[cm^2]
No. of steel	=	**10**	
As	=	61.58	[cm^2]

Section OK

Check Deflection

Δ all	=	1.11	[cm]		
ρ fy	=	39	>	35	[kg/cm^2]
Y'	=	29.2			
I	=	1451674	[cm^4]		
Ec	=	284116	[kg/cm^2]		
Δ	=	0.08	[cm] <	Δ all	OK
Δ Time	=	0.09	<	Δ all	OK

KINGDOM OF THAILAND
CHOKCHAI KHATKHAJORN
โชคชัย ขัดขจร
สย. 4522
REGISTERED PROFESSIONAL ENGINEER

DYNAMIC ENGINEERING CONSULTANT CO., LTD.

RC-I EXCEL — **Ultimate Stress Design method in accordance with ACI 318-89**

Design Reinforced Concrete Beam

Project	อาคารทิศตะวันออก โซน ซี	**Beam Code**	MB-4C
Engineer	CKJ	**File Name**	Beam MB
		Date	29 Jun 20

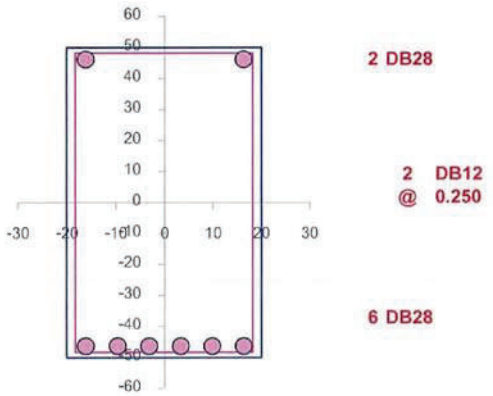

Positive Section

MB-4C (40 X 100)

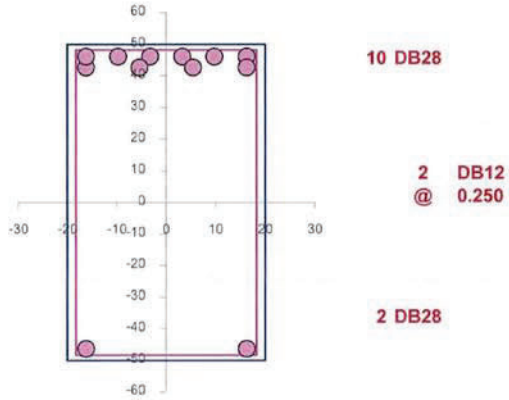

Negative Section

MB-4C (40 X 100)

KINGDOM OF THAILAND
CHOKCHAI KHATKHAJORN
โชคชัย ขัดขจร
สย. 4522
REGISTERED PROFESSIONAL ENGINEER

DYNAMIC ENGINEERING CONSULTANT CO., LTD.

RC-I EXCEL — **Ultimate Stress Design method in accordance with ACI 318-89**

Design Reinforced Concrete Beam

Project	อาคารทิศตะวันออก โซน ซี	**Beam Code**	MB-5
Engineer	CKJ	**File Name**	Beam MB
		Date	30 Jun 20

	fc'	=	350	[kg/cm^2]
	fy SD	=	4000	[kg/cm^2]
	fy SD	=	2400	[kg/cm^2]
$M_{-pos.}$	Mu$^+$	=	218295	[kg-m]
$M_{-neg.}$	Mu$^-$	=	218295	[kg-m]
$V_{max.}$	Vu	=	78750	[kg]
	DL	=	2850	[kg/m]
	LL	=	7150	[kg/m]
Length	Ln	=	840	[cm]
width	b	=	40	[cm]
depth	t	=	100	[cm]
	d'	=	5	[cm]
siding	d"	=	3.5	[cm]

For Positive Moment :

Upper Steel	DB28
Lower Steel	DB28
Stirrup Steel	DB12

	d	=	95 [cm]
	a try	=	24.6542 [cm]
	As	=	73.346 [cm^2]
	a	=	**24.6542** [cm]
	ϕ Bend	=	0.90
	ϕ Shea	=	0.85
	k1	=	0.80
	Es	=	2040000 [kg/cm^2]
	Ec	=	284553 [kg/cm^2]
	n	=	7
	ρ	=	0.0360
	ρ_{max}	=	0.0270
	As	=	102.529 [cm^2]
	a	=	34.464 [cm]
	Mu	=	287047 [kg-m]
	M1	=	0 [kg-m]
	As'	=	0.0000 [cm^2]
No. of steel		=	**2**
	As	=	12.32 [cm^2]
	Σ As	=	73.346 [cm^2]
No. of steel		=	**12**
	As	=	73.89 [cm^2]

Section OK

Stirrup Design

0.53 ϕ (fc')$^{0.5}$ bd	=	33911	[kg]	
L=Ln/2(Vu - ϕ Vc)/Vu	=	266.3	[cm]	
S	=	19.553	[cm]	
Used Stirrup	2	DB12 @ 0.175		OK

For Negative Moment :

Upper Steel	DB28
Lower Steel	DB28
Stirrup Steel	DB12

	d	=	95 [cm]
	a try	=	8.7110 [cm]
	As	=	66.896 [cm^2]
	a	=	**22.4860** [cm]
	ϕ Bend	=	0.90
	ϕ Shea	=	0.85
	k1	=	1.05
	Es	=	2040000 [kg/cm^2]
	Ec	=	284553 [kg/cm^2]
	n	=	7
	ρ	=	0.0472
	ρ_{max}	=	0.0354
	As	=	134.570 [cm^2]
	a	=	45.234 [cm]
	Mu	=	350662 [kg-m]
	M1	=	0 [kg-m]
	As'	=	0.0000 [cm^2]
No. of steel		=	**2**
	As	=	12.32 [cm^2]
	Σ As	=	66.896 [cm^2]
No. of steel		=	**11**
	As	=	67.73 [cm^2]

Section OK

Check Deflection

Δ all	=	2.33 [cm]		
ρ fy	=	78	>	35 [kg/cm^2]
Y'	=	38.3		
I	=	2411935 [cm^4]		
Ec	=	284116 [kg/cm^2]		
Δ	=	0.95 [cm]	<	Δ all OK
Δ Time	=	1.08	<	Δ all OK

KINGDOM OF THAILAND
CHOKCHAI KHATKHAJORN
โชคชัย ขัดขจร
สย. 4522
REGISTERED PROFESSIONAL ENGINEER

DYNAMIC ENGINEERING CONSULTANT CO., LTD.

RC-I EXCEL — **Ultimate Stress Design method in accordance with ACI 318-89**

Design Reinforced Concrete Beam

Project	อาคารทิศตะวันออก โซน ซี	**Beam Code**	MB-5
Engineer	CKJ	**File Name**	Beam MB
		Date	30 Jun 20

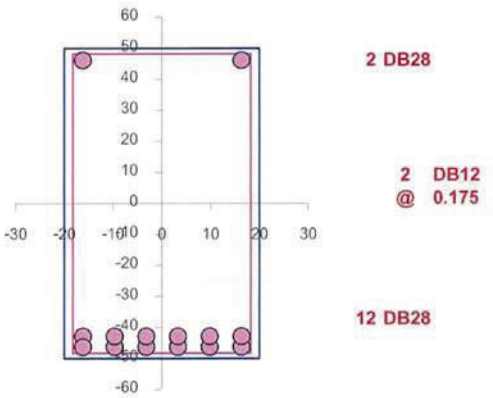

Positive Section

MB-5 (40 X 100)

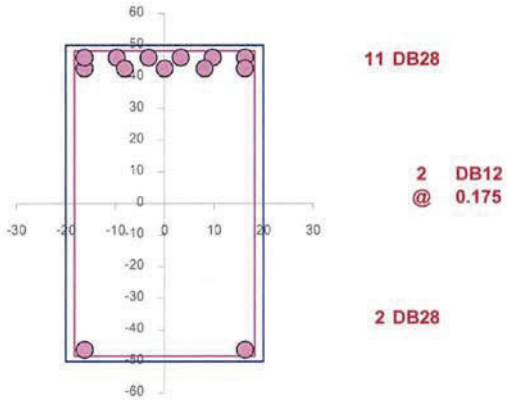

Negative Section

MB-5 (40 X 100)

KINGDOM OF THAILAND
CHOKCHAI KHATKHAJORN
โชคชัย ขัดขจร
สย. 4522
REGISTERED PROFESSIONAL ENGINEER

DYNAMIC ENGINEERING CONSULTANT CO., LTD.

RC-I EXCEL — **Ultimate Stress Design method in accordance with ACI 318-89**

Design Reinforced Concrete Beam

Project	อาคารทิศตะวันออก โซน ซี	**Beam Code**	MB-5A
Engineer	CKJ	**File Name**	Beam MB
		Date	30 Jun 20

	fc'	=	350	[kg/cm²]
	fy SD	=	4000	[kg/cm²]
	fy SD	=	2400	[kg/cm²]
$M_{-pos.}$	Mu^+	=	34750	[kg-m]
$M_{-neg.}$	Mu^-	=	34750	[kg-m]
$V_{max.}$	Vu	=	27800	[kg]
	DL	=	2960	[kg/m]
	LL	=	8160	[kg/m]
Length	Ln	=	500	[cm]
width	b	=	40	[cm]
depth	t	=	90	[cm]
	d'	=	5	[cm]
siding	d"	=	3.5	[cm]

For Positive Moment :

Upper Steel	DB20
Lower Steel	DB20
Stirrup Steel	DB10

	d	=	85	[cm]
	a try	=	3.9070	[cm]
	As	=	11.623	[cm²]
	a	=	**3.9070**	[cm]
	ϕ Bend	=	0.90	
	ϕ Shea	=	0.85	
	k1	=	0.80	
	Es	=	2040000	[kg/cm²]
	Ec	=	284553	[kg/cm²]
	n	=	7	
	ρ	=	0.0360	
	ρ_{max}	=	0.0270	
	As	=	91.737	[cm²]
	a	=	30.836	[cm]
	Mu	=	229797	[kg-m]
	M1	=	0	[kg-m]
	As'	=	0.0000	[cm²]
No. of steel		=	**2**	
	As	=	6.28	[cm²]
	Σ As	=	11.623	[cm²]
No. of steel		=	**4**	
	As	=	12.57	[cm²]

Section OK

For Negative Moment :

Upper Steel	DB20
Lower Steel	DB20
Stirrup Steel	DB10

	d	=	85	[cm]
	a try	=	8.7110	[cm]
	As	=	11.970	[cm²]
	a	=	**4.0234**	[cm]
	ϕ Bend	=	0.90	
	ϕ Shea	=	0.85	
	k1	=	1.05	
	Es	=	2040000	[kg/cm²]
	Ec	=	284553	[kg/cm²]
	n	=	7	
	ρ	=	0.0472	
	ρ_{max}	=	0.0354	
	As	=	120.405	[cm²]
	a	=	40.472	[cm]
	Mu	=	280724	[kg-m]
	M1	=	0	[kg-m]
	As'	=	0.0000	[cm²]
No. of steel		=	**2**	
	As	=	6.28	[cm²]
	Σ As	=	11.970	[cm²]
No. of steel		=	**4**	
	As	=	12.57	[cm²]

Section OK

Stirrup Design

$0.53\ \phi\ (fc')^{0.5}$ bd	=	30341	[kg]
L=Ln/2(Vu - ϕ Vc)/Vu	=	18.1	[cm]
S	=	-107.188	[cm]

Used Stirrup 1 | DB10 | @ | #N/A | #N/A

Check Deflection

Δ all	=	1.39 [cm]			
ρ fy	=	15	<	35	[kg/cm²]
Y'	=	17.3			
I	=	2047083	[cm⁴]		
Ec	=	284116	[kg/cm²]		
Δ	=	0.16 [cm]	<	Δ all	OK
Δ Time	=	0.07	<	Δ all	OK

KINGDOM OF THAILAND
CHOKCHAI KHATKHAJORN
โชคชัย ขัดขจร
สย. 4522
REGISTERED PROFESSIONAL ENGINEER

DYNAMIC ENGINEERING CONSULTANT CO., LTD.

RC-I EXCEL — Ultimate Stress Design method in accordance with ACI 318-89

Design Reinforced Concrete Beam

Project	อาคารทิศตะวันออก โซน ซี	Beam Code	MB-5A
Engineer	CKJ	File Name	Beam MB
		Date	30 Jun 20

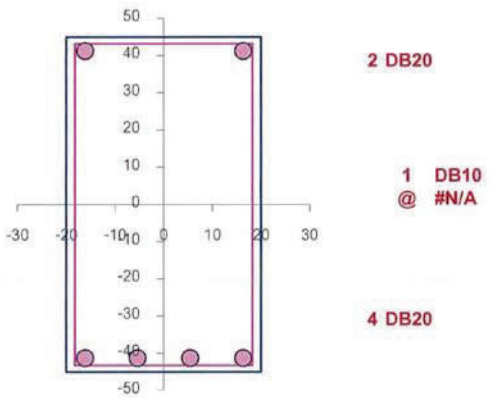

Positive Section
MB-5A (40 X 90)

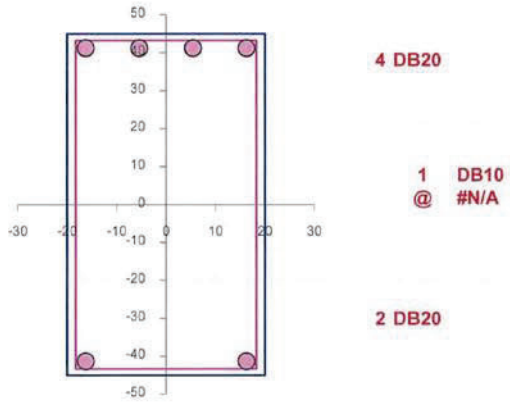

Negative Section
MB-5A (40 X 90)

KINGDOM OF THAILAND
CHOKCHAI KHATKHAJORN
โชคชัย ขัดขจร
สย. 4522
REGISTERED PROFESSIONAL ENGINEER

DYNAMIC ENGINEERING CONSULTANT CO., LTD.

RC-I EXCEL — **Ultimate Stress Design method in accordance with ACI 318-89**

Design Reinforced Concrete Beam

Project	อาคารทิศตะวันออก โซน ซี	**Beam Code**	MB-5B
Engineer	CKJ	**File Name**	Beam MB
		Date	30 Jun 20

	fc'	=	350	[kg/cm²]
	fy SD	=	4000	[kg/cm²]
	fy SD	=	2400	[kg/cm²]
$M_{-pos.}$	Mu^+	=	180079	[kg-m]
$M_{-neg.}$	Mu^-	=	75000	[kg-m]
$V_{max.}$	Vu	=	68804	[kg]
	DL	=	2960	[kg/m]
	LL	=	8160	[kg/m]
Length	Ln	=	840	[cm]
width	b	=	30	[cm]
depth	t	=	100	[cm]
	d'	=	5	[cm]
siding	d"	=	3.5	[cm]

For Positive Moment :

Upper Steel	DB28
Lower Steel	DB28
Stirrup Steel	DB12

	d	=	95 [cm]
	a try	=	27.6113 [cm]
	As	=	61.608 [cm²]
	a	=	**27.6113** [cm]
	ϕ Bend	=	0.90
	ϕ Shea	=	0.85
	k1	=	0.80
	Es	=	2040000 [kg/cm²]
	Ec	=	284553 [kg/cm²]
	n	=	7
	ρ	=	0.0360
	ρ_{max}	=	0.0270
	As	=	76.897 [cm²]
	a	=	34.464 [cm]
	Mu	=	215285 [kg-m]
	M1	=	0 [kg-m]
	As'	=	0.0000 [cm²]
No. of steel		=	**2**
	As	=	12.32 [cm²]
	Σ As	=	61.608 [cm²]
No. of steel		=	**11**
	As	=	67.73 [cm²]

Section OK

For Negative Moment :

Upper Steel	DB28
Lower Steel	DB28
Stirrup Steel	DB12

	d	=	95 [cm]
	a try	=	8.7110 [cm]
	As	=	22.984 [cm²]
	a	=	**10.3008** [cm]
	ϕ Bend	=	0.90
	ϕ Shea	=	0.85
	k1	=	1.05
	Es	=	2040000 [kg/cm²]
	Ec	=	284553 [kg/cm²]
	n	=	7
	ρ	=	0.0472
	ρ_{max}	=	0.0354
	As	=	100.927 [cm²]
	a	=	45.234 [cm]
	Mu	=	262996 [kg-m]
	M1	=	0 [kg-m]
	As'	=	0.0000 [cm²]
No. of steel		=	**2**
	As	=	12.32 [cm²]
	Σ As	=	22.984 [cm²]
No. of steel		=	**4**
	As	=	24.63 [cm²]

Section OK

Stirrup Design

$0.53\ \phi\ (fc')^{0.5}$ bd	=	25433	[kg]
L=Ln/2(Vu - ϕ Vc)/Vu	=	288.0	[cm]
S	=	20.215	[cm]

Used Stirrup 2 | DB12 @ 0.200 | OK

Check Deflection

Δ all	=	2.33 [cm]		
ρ fy	=	95	>	35 [kg/cm²]
Y'	=	41.2		
I	=	2071682 [cm⁴]		
Ec	=	284116 [kg/cm²]		
Δ	=	1.22 [cm]	<	Δ all OK
Δ Time	=	1.37	<	Δ all OK

DYNAMIC ENGINEERING CONSULTANT CO., LTD.

RC-I EXCEL — Ultimate Stress Design method in accordance with ACI 318-89

Design Reinforced Concrete Beam

Project	อาคารทิศตะวันออก โซน ซี	Beam Code	MB-5B
Engineer	CKJ	File Name	Beam MB
		Date	30 Jun 20

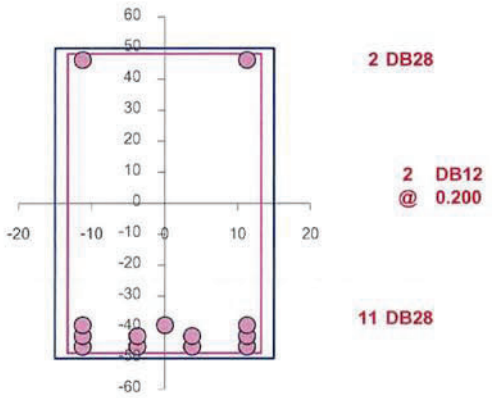

Positive Section
MB-5B (30 X 100)

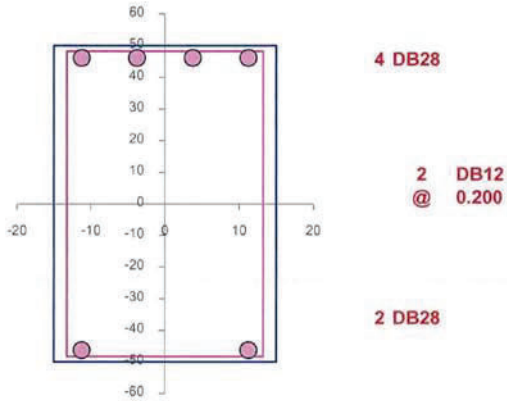

Negative Section
MB-5B (30 X 100)

KINGDOM OF THAILAND
CHOKCHAI KHATKHAJORN
โชคชัย ขัดขจร
สย. 4522
REGISTERED PROFESSIONAL ENGINEER